KIKUSUI

Part No. IB036702
Jul 2025

Communication Interface Manual

Regulated DC Power Supply

PMX-E Series

PMX18-2E
PMX18-5E
PMX35-1E
PMX35-3E
PMX70-1E
PMX110-0.6E
PMX250-0.25E
PMX350-0.2E
PMX500-0.1E

Table of Contents

Command List 5

Introduction 9

About This Manual 9

Setup 10

VISA library 10
Setting Up the Interface 10
Accessing and Operating the Product from a Web Browser (LAN) 18
About Commands 25
Command Syntax 26

IEEE 488.2 common commands 30

*CLS 30
*ESE 30
*ESR? 30
*IDN? 31
*LRN? 31
*OPC 31
*OPT? 31
*PSC 32
*RCL 32
*RST 33
*SAV 33
*SRE 33
*STB? 34
*TRG 34
*TST? 34
*WAI 34
List of *RCL, *RST, and *SAV parameters targeted for set memory 35

ABORt Command 36

ABOR 36
ABOR:TRAN 36

DISPlay Command 37

DISP:BRIG 37

INITiate Command 38

INIT:TRAN 38

INSTrument Command 39

INST:INFO? 39

MEASure/FETCh Command 40

MEAS:ALL?/ FETC:ALL? 40
MEAS:CURR?/ FETC:CURR? 40
MEAS:VOLT?/ FETC:VOLT? 40

MEMory Command 41

MEM:REC 41
MEM:REC:CONF 41
MEM:REC:PREV? 42
MEM:SEQ 42
MEM:SEQ:TIME{A|B|C}:ENAB 43
MEM:SEQ:TIME{A|B|C} 43
MEM:SEQ:LOOP 44
MEM:SAVE 44

OUTPut Command 45

OUTP 45
OUTP:DEL:ON 45
OUTP:DEL:OFF 46
OUTP:EXT 46
OUTP:EXT:ADV 47
OUTP:EXT:LOG 47
OUTP:PON 48
OUTP:PROT:CLE 48
OUTP:PROT:WDOG 49
OUTP:OFFT 49
OUTP:OFFT:TIM 50
OUTP:OFFT:TIM:REM? 50
OUTP:OFFT:CVCC 50
OUTP:OFFT:CVCC:TIM 51
OUTP:OFFT:INV:TIM 51

[SOURce:]POWer Command 52

POW:LIM:AUTO 52

[SOURce:]CURRent Command 53

CURR. 53
CURR:EXT:SOUR 53
CURR:LIM:AUTO. 54
CURR:PROT 54
CURR:PROT:DEL 55
CURR:SST:FALL 55
CURR:SST:RISE 56
CURR:OFFT:OVER 56
CURR:OFFT:UND 57
CURR:TRIG 57

[SOURce:]VOLTage Command 58

VOLT 58
VOLT:EXT:SOUR 58
VOLT:LIM:AUTO 59
VOLT:PROT. 59
VOLT:SST:FALL 60
VOLT:SST:RISE 60
VOLT:OFFT:OVER 61
VOLT:OFFT:UND 62
VOLT:TRIG 62

STATus Command 63

Status Report Structure 63
Standard architecture. 64
Status byte register 65
Event status register 66
OPERation status register 67
STAT:OPER?. 67
STAT:OPER:COND?. 67
STAT:OPER:ENAB 68
STAT:OPER:NTR 68
STAT:OPER:PTR 68
QUEStionable status register. 69
STAT:QUES?. 69
STAT:QUES:COND?. 69
STAT:QUES:ENAB 70
STAT:QUES:NTR 70
STAT:QUES:PTR 70
Preset status 71
STAT:PRES 71

SYSTem Command 72

SYST:COMM:RLST 72
SYST:CONF:BLE. 73
SYST:CONF:STAR:PRI 73
SYST:ERR? 74
SYST:ERR:COUN? 74
SYST:ERR:TRAC. 74
SYST:EXT:STAT:CC:POL 75
SYST:EXT:STAT:CV:POL 75
SYST:EXT:STAT:OUTP:POL. 76
SYST:EXT:STAT:PROT:POL. 76
SYST:KLOC 77
SYST:KLOC:MODE 77
SYST:LOC/ SYST:REM/ SYST:RWL. 78
SYST:VERS?. 78

TRIGger Command 79

TRIG:TRAN 79
TRIG:TRAN:SOUR. 79

Tutorial 80

Setup and measurement 80
Changing settings by trigger (TRANsient) . . . 82
Status Monitoring 84
Error Checking 86
Visual Basic 2022. 87

Appendix 89

List of Errors. 89
Disabling output on. 92
Command Processing Time. 93

Command List

IEEE 488.2 common commands

*CLS

Clears all event registers including the status byte, event status, and error queue. *(p.30)*

*ESE

Sets the event status enable register that is counted by the event summary bit (ESB) of the status byte. *(p.30)*

*ESR?

Queries the event status register. *(p.30)*

*IDN?

Queries the model name and firmware version of this product. *(p.31)*

*LRN?

Queries the command that can restore the current panel settings. *(p.31)*

*OPC

Sets the OPC bit (bit 0) of the event status register when all the commands that are in standby have been processed. *(p.31)*

*OPT?

Queries the installed options. *(p.31)*

*PSC

Sets whether the event status enable register and service request enable register are cleared when the POWER switch is turned on. *(p.32)*

*RCL

Recalls settings from a set memory. If a set memory is recalled while the output is off, the settings will be applied according to the settings saved in the set memory. *(p.32)*

*RST

Initializes the settings targeted for the set memory. *(p.33)*

*SAV

Saves the current settings to the set memory. *(p.33)*

*SRE

Sets the service request enable register. *(p.33)*

*STB?

Queries the contents of the status byte register and the MSS (master summary status) message. *(p.34)*

*TRG

Trigger command. *(p.34)*

*TST?

Executes a self-test. *(p.34)*

*WAI

Subsequent commands will not be executed until all pending operations are completed. *(p.34)*

ABORt Command

ABOR

Aborts the setting change operation. *(p.36)*

ABOR:TRAN

Aborts the setting change operation. *(p.36)*

DISPlay Command

DISP:BRIG

Sets the panel display brightness. *(p.37)*

INITiate Command

INIT:TRAN

Starts the transient trigger function, which changes settings. *(p.38)*

INSTrument Command

INST:INFO?

Queries information about the current operation target. *(p.39)*

MEASure/FETCh Command

MEAS:ALL?/ FETC:ALL?

Queries the current and voltage. *(p.40)*

MEAS:CURR?/ FETC:CURR?

Queries the current. *(p.40)*

MEAS:VOLT?/ FETC:VOLT?

Queries the voltage. *(p.40)*

MEMory Command

MEM:REC

Recalls settings from the preset memory (A, B, C). *(p.41)*

If you recall a preset memory when the output is off, the settings will be applied according to the settings saved in the preset memory. *(p.41)*

MEM:REC:CONF

Sets whether display the settings saved in the memory before recalling the preset memory via panel operation. *(p.41)*

MEM:REC:PREV?

Queries the settings stored in preset memories A, B, and C. *(p.42)*

MEM:SEQ

Set the memory sequence function to enabled/ disabled. *(p.42)*

MEM:SEQ:TIME{A|B|C}:ENAB

Enables/disables preset memories A, B, and C in the memory sequence function. *(p.43)*

MEM:SEQ:TIME{A|B|C}

Sets the output time for preset memories A, B, and C in the memory sequence function. *(p.43)*

MEM:SEQ:LOOP

Sets the repetition count for the memory sequence function. *(p.44)*

MEM:SAVE

Saves the settings to the preset memory. *(p.44)*

OUTPut Command

OUTP

Sets the output to on or off. *(p.45)*

OUTP:DEL:ON

Sets the output-on delay. *(p.45)*

OUTP:DEL:OFF

Sets the output-off delay. *(p.46)*

OUTP:EXT

This is an old style command. *(p.46)*

OUTP:EXT:ADV

Sets whether output will be turned on and off externally. *(p.47)*

OUTP:EXT:LOG

Sets the logic for turning on/off the output via external control. *(p.47)*

OUTP:PON

Sets the output condition that the PMX-E series will be in when the power is turned on. *(p.48)*

OUTP:PROT:CLE

Clears alarms. *(p.48)*

OUTP:PROT:WDOG

Sets the communication monitoring (WATCHDOG) timer. *(p.49)*

OUTP:OFFT

Sets the output-off timer function to enabled/disabled. *(p.49)*

OUTP:OFFT:TIM

Sets the output-off timer time. *(p.50)*

OUTP:OFFT:TIM:REM?

Queries the remaining time of the output-off timer after the output turns on. *(p.50)*

OUTP:OFFT:CVCC

Sets the trigger operation mode for the output-off timer function. *(p.50)*

OUTP:OFFT:CVCC:TIM

Sets the output-off timer after the trigger operation mode starts. *(p.51)*

OUTP:OFFT:INV:TIM

Sets the duration to be excluded from the output-off timer after the output turns on. *(p.51)*

[SOURce:]POWer Command

POW:LIM:AUTO

Sets the output power limit value. *(p.52)*

[SOURce:]CURRent Command

CURR

Set the current. *(p.53)*

CURR:EXT:SOUR

Sets whether to perform external control via CC control. *(p.53)*

CURR:LIM:AUTO

Sets whether to limit the current setting to prevent it from exceeding the OCP trip point. *(p.54)*

CURR:PROT

Sets the trip point for the overcurrent protection (OCP). *(p.54)*

CURR:PROT:DEL

Sets the time from overcurrent detection to OCP activation. *(p.55)*

CURR:SST:FALL

Sets the soft stop time in CC mode. *(p.55)*

CURR:SST:RISE

Sets the soft start time in CC mode. *(p.56)*

CURR:OFFT:OVER

Sets the upper limit current value at which the output-off timer function turns off the output. *(p.56)*

CURR:OFFT:UND

Sets the lower limit current value at which the output-off timer function turns off the output. *(p.57)*

CURR:TRIG

Sets the current value to be changed by a trigger. *(p.57)*

[SOURce:]VOLTage Command

VOLT

Set the voltage. *(p.58)*

VOLT:EXT:SOUR

Sets whether to use external CV control. *(p.58)*

VOLT:LIM:AUTO

Sets whether to limit the voltage setting to prevent it from exceeding the OVP trip point. *(p.59)*

VOLT:PROT

Sets the trip point for the overvoltage protection (OVP). *(p.59)*

VOLT:SST:FALL

Sets the soft stop time in CV mode. *(p.60)*

VOLT:SST:RISE

Sets the soft start time in CV mode. *(p.60)*

VOLT:OFFT:OVER

Sets the upper limit voltage value at which the output-off timer function turns off the output. *(p.61)*

VOLT:OFFT:UND

Sets the lower limit voltage value at which the output-off timer function turns off the output. *(p.62)*

VOLT:TRIG

Sets the voltage value to be changed by a trigger. *(p.62)*

STATus Command

STAT:OPER?

Queries the event of the OPERation status register. *(p.67)*

STAT:OPER:COND?

Queries the condition of the OPERation status register. *(p.67)*

STAT:OPER:ENAB

Sets the enable register of the OPERation status register. *(p.68)*

STAT:OPER:NTR

Sets the negative transition filter of the OPERation status register. *(p.68)*

STAT:OPER:PTR

Sets the positive transition filter of the OPERation status register. *(p.68)*

STAT:QUES?

Queries the event of the QUEStionable status register. *(p.69)*

STAT:QUES:COND?

Queries the condition of the QUEStionable status register. *(p.69)*

STAT:QUES:ENAB

Sets the enable register of the QUEStionable status register. *(p.70)*

STAT:QUES:NTR

Sets the negative transition filter of the QUEStionable status register. *(p.70)*

STAT:QUES:PTR

Sets the positive transition filter of the QUEStionable status register. *(p.70)*

STAT:PRES

Resets the ENABle, PTRansition, and NTRansition filter registers of all status registers (including sub registers) to their default values. *(p.71)*

SYSTem Command

SYST:COMM:RLST

Sets the operating mode to local or remote. *(p.72)*

SYST:CONF:BLE

Sets the bleeder circuit operation. *(p.73)*

SYST:CONF:STAR:PRI

Sets the prioritized operation mode when the output is turned on. *(p.73)*

SYST:ERR?

Reads the oldest error information or event information from the error queue. *(p.74)*

SYST:ERR:COUN?

Reads the number of unread errors in the error queue. *(p.74)*

SYST:ERR:TRAC

Executes a debug trace and sets whether communication errors are displayed or not. *(p.74)*

SYST:EXT:STAT:CC:POL

Sets the polarity of the status output signal for constant-current mode. *(p.75)*

SYST:EXT:STAT:CV:POL

Sets the polarity of the status output signal for constant-voltage mode. *(p.75)*

SYST:EXT:STAT:OUTP:POL

Sets the polarity of the status output signal for output on. *(p.76)*

SYST:EXT:STAT:PROT:POL

Sets the polarity of the status output signal for protection operation. *(p.76)*

SYST:KLOC

Locks or releases panel operations (key lock). *(p.77)*

SYST:KLOC:MODE

Sets the key lock mode. *(p.77)*

SYST:LOC/ SYST:REM/ SYST:RWL

This is an old style command. *(p.78)*

SYST:VERS?

Queries the version of the SCPI specifications that the PMX-E series complies with. *(p.78)*

TRIGger Command

TRIG:TRAN

Executes a software trigger on the TRANsient trigger subsystem. *(p.79)*

TRIG:TRAN:SOUR

Sets the condition (trigger source) for actually changing the settings after the TRANsient trigger subsystem receives an INIT:TRAN. *(p.79)*

Introduction

The Communication Interface Manual explains the settings and commands that remotely control the PMX-E series through the following interfaces.

- RS232C interface
- USB interface
- LAN interface

When PMX-E is being controlled remotely, the REMOTE LED on the front panel lights. To change the mode from remote to local via panel operation, press the LOCAL key, (except during access to the Web browser interface*(p.18)*).

For precautions for use, installation, operations, and specifications regarding the PMX-E series, refer to the User's Manual.

About This Manual

Intended readers

This manual is written for readers with sufficient basic knowledge of how to control measuring instruments using a PC.

Trademarks

Microsoft and Windows are trademarks of Microsoft Corporation in the United States and/or other countries.

All other company and product names used in this manual are trademarks or registered trademarks of their respective owners.

Measuring instrument interface standards

PMX-E series complies with the following standards.

- IEEE Std 488.2-1992 IEEE Standard Codes, Formats, Protocols, and Common Commands for Use with IEEE Std 488.1-1987
- IEEE Std 488.1-1987 IEEE Standard Digital Interface for Programmable Instrumentation
- Standard Commands for Programmable Instruments (SCPI) Version 1999.0
- Universal Serial Bus Specification Rev 2.0
- Universal Serial Bus Test and Measurement Class Specification (USBTMC) Rev 1.0
- Universal Serial Bus Test and Measurement Class, Subclass USB488 Specification (USBTMC-USB488) Rev 1.0
- TCP/IP Instrument Protcol Specification VXI-11 Rev 1.0 1995
- TCP/IP-IEEE488.2 Interface Specification VXI-11.3 Draft 0.3 1995
- 1.5 LXI Device Specification 2016
- LXI HiSLIP Extended Function Rev 1.01
- IVI-6.1 IVI High-Speed LAN Instrument Protocol (HiSLIP) Rev 2.0
- VPP-4.3 The VISA Library 2015 Rev 5.5

Copyright

The contents of this manual may not be reproduced, in whole or in part, without the prior consent of the copyright holder.

The specifications of this product and the contents of this manual are subject to change without prior notice.

Copyright© 2024 Kikusui Electronics Corporation

Setup

VISA library

VISA (Virtual Instrument Software Architecture) was developed by the IVI Foundation. It is the standard specification for measurement instrument connection software.

Need for VISA library

- To use the VISA library (VISA COM) with the I/O library, the VISA library must be installed on the controller (Windows).
- If you are controlling the instrument using RS232C or LAN communication from a PLC or microcomputer board, a VISA library is not required.

Installing a VISA library

You have to install one of the following VISA libraries (driver software that is implemented according to the VISA specifications).

- NI-VISA by National Instruments Corporation (Ver. 21.5 or later)
- Keysight VISA by Keysight Technologies (Keysight IO Libraries Suite 2020 or later)
- KI-VISA (Ver. 5.5 or later)

NOTE

- Do not install multiple VISA libraries on the same PC. Doing so may cause errors.
- If NI-VISA or Keysight VISA is already installed on your PC, you do not need to install KI-VISA.

KI-VISA, an original VISA from KIKUSUI CORPORATION, is available that supports IVI VISA specifications 5.0. You can also download from the Kikusui Electronics Corporation website (https://global.kikusui.co.jp/downloads/).

Setting Up the Interface

⚠WARNING

Risk of electric shock or fire.

- **When remotely controlling the PMX-E series, take safety measures such as using a communication monitoring (Watchdog*(p.49)*) timer.**
  If the remote control via digital communication fails, this product will behave unexpectedly, resulting in electric shock, fire, or property damage to the load, etc.

The PMX-E series comes standard with RS232C, USB, and LAN interfaces.
There is no need to switch interfaces. All interfaces can be used simultaneously.
Each interface can be turned off in the CONFIG settings.

- RS232C
- USB
- LAN
- Accessing and Operating the Product from a Web Browser (LAN)

RS232C

Connection

With the POWER switch turned off, connect the PMX-E series to the PC using a D-sub 9-pin, female-to-female, crossover cable.

Remove the cover from the RS232C connector and connect the cable. Keep the cover in a safe place. For safety reasons, be sure to attach the cover when you are not using the RS232C port. If it is damaged or lost, contact your Kikusui agent or distributor.

The PMX-E series supports hardware handshaking. If you use it, use a cable connected as shown in Crossover cable example 1. Otherwise, use one connected as shown in Crossover cable example 2.

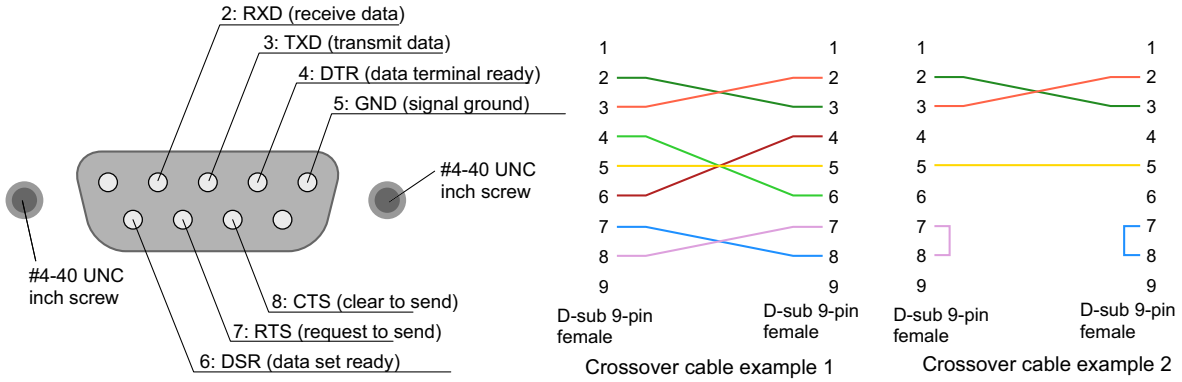

RS232C pinout
(viewed from the PMX-E series' rear panel)

Crossover cable example 1
(When using hardware handshaking)

Crossover cable example 2
(When not using hardware handshaking)

Setup

For CONFIG settings on the settings, refer to the User's Manual.

NOTE

By factory default, RS232C is set to enabled and the baud rate 19200 bps. Skip the following procedure unless you need to change the settings.

1. **Hold down CONFIG until CF40 is displayed.**
2. **Turn the VOLTAGE knob until CF42 (RS232C interface setting) is displayed.**
3. **Use the CURRENT knob to select ON.**
   RS232C is enabled.
4. **Hold down the CONFIG key until CF70 is displayed.**
5. **Turn the VOLTAGE knob until CF72 (RS232C baud rate setting) is displayed. Then, turn the CURRENT knob to set the communication speed.**
   For selectable baud rates, see the protocol table.
6. **Press and hold down the CONFIG key until the measured value display appears, or press the LOCK key.**
   The CONFIG settings are exited, and the measured value display appears.
7. **Turn on the POWER switch again.**
   The settings are applied.

NOTE

Restart the computer after resetting to the factory default settings. You see a "-315 Configuration memory lost", which is not abnormal.Use a *CLS command or turn the power back on to clear the error.

Protocol

The RS232C protocol is shown in the following table.
The underlined value is the factory default value.

Item	Set value
Bitrate: data rate (bps)	1200/2400/4800/9600/<u>19200</u>/38400/57600/115200
Data Bits: Data length	8 bits (fixed)
Stop Bits	1 bit (fixed)
Parity	None (fixed)
Flow Control	Enabled (fixed) - RTS/CTS

RS232C transmission and reception

The PMX-E series uses flow control (fixed). It can also send and receive data without using flow control; however, if you send the commands to be set in rapid succession, the receive buffer of the PMX-E series may overrun. Either do not send consecutive commands—send query commands and read the responses at fixed intervals—or reduce the command transmission frequency.

Break signal

The break signal is used as a substitute for the IEEE488.1 dcl/sdc (Device Clear, Selected Device Clear) message.

NOTE

To use the RS232C interface, you must enable the remote control by issuing the command: `SYST:COMM:RLST REM`. To use remote programming, send “`SYST:COMM:RLST REM`” at the beginning of the program.

USB

Controlling the PMX-E series via a USB interface requires a device driver that complies with the USB T&M class (USBTMC). The USBTMC driver is installed automatically by the VISA library.

NOTE

By factory default, USB is set to enabled. Skip the following procedure unless you need to change the settings.

Connection

Connect the PMX-E series to your PC using a USB cable.

Setup

For details on CONFIG settings, refer to the User's Manual.

1. **Hold down the CONFIG key until CF40 is displayed.**
2. **Turn the VOLTAGE knob until C41 (USB interface setting) is displayed. Then, turn the VOLTAGE knob and use the CURRENT knob to select ON.**
   USB is enabled.
3. **Press and hold down the CONFIG key until the measured value display appears, or press the LOCK key.**
   The CONFIG settings are exited, and the measured value display appears.
4. **Turn on the POWER switch again.**
   The settings are applied.

NOTE

Restart the computer after resetting to the factory default settings. You see a "-315 Configuration memory lost", which is not abnormal.Use a *CLS command or turn the power back on to clear the error.

Service request

This product is equipped with service request and serial polling functions.

USB specifications

Complies with USB Specification 2.0
Complies with USBTMC Specification 1.0 and USBTMC-USB488 Specification 1.0
Baud rate: 12 Mbps maximum (full speed)
VID (vendor ID): 0x0B3E
PID (product ID): 0x105E
You can view the VID and PID in the CONFIG settings CF70 and CF71.

LAN

⚠WARNING

Risk of electric shock or fire.

- **When remotely controlling the PMX-E series from a distance, prepare an environment where you can check the situation, e.g., by installing a web camera.**
  If a network problem occurs, an unexpected dangerous voltage may occur.

Risk of electric shock or damage to the instrument.

- **Set up security with password protection and host restriction by IP address.**
  The LAN interface can be accessed from anywhere on the network that the product is connected to.

⚠CAUTION

The product may be subject to attacks that exploit vulnerabilities.

- **To mitigate the risk, take the following measures.**
  - Protection by antivirus software
  - Data input/output protection
  - Backup for data restoration
  - Prevention of computer virus infection for installed software
  - Adequate measures to prevent unauthorized access to our products

  For example, take appropriate security measures such as blocking external networks with a firewall, restricting network access with a VPN, and filtering well-known ports on the network side.

The LAN interface complies with the 1.5 LXI Device Specification 2016 and supports VXI-11, HiSLIP, and SCPI-RAW protocols.

Controlling the PMX-E series via a LAN interface requires middleware that supports the SCPI-Telnet, VXI-11, HiSLIP, and SCPI-RAW protocols. The middleware is installed automatically by the VISA library.

The LAN interface board has a Web browser interface (Web Browser Interface). You can configure the LAN interface settings from your PC's Web browser.

For information on topics such as connecting to your corporate LAN, your IP address, your host name, and security, contact your network administrator.

NOTE

- To use the LAN interface, you must enable the remote control by issuing the command: `SYST:COMM:RLST REM`.
  To use remote programming, send "`SYST:COMM:RLST REM`" at the beginning of the program.
- During the operation of the automated measurement system, avoid restarting or resetting (CF60) the LAN interface carelessly. Otherwise, a malfunction may occur.

Connection

Use a standard LAN cable (straight) to connect the PMX-E series to a network hub or router.
The shape of the LAN connector on the PMX-E series side is RJ-45.

Setup

NOTE

By factory default, LAN is set to enabled. In general, using the factory default settings is recommended.

Item	Factory default settings	CONFIG settings
LAN interface setting	Use LAN	CF40: LAN
IP address assignment method	DHCP: On AUTO IP: On MANUAL IP: Off	CF61: 110

For CONFIG settings on the settings, refer to the User's Manual.

1 **Hold down CONFIG until CF40 (LAN interface setting) is displayed.**

2 **Turn the CURRENT knob to select ON (CF40: ON).**

3 **Hold down CONFIG until CF60 is displayed.**

4 **Turn the VOLTAGE knob to set it to CF61.**

5 **Turn the CURRENT knob to set the IP address assignment method.**

- The factory default setting is "110" (DHCP: on; AUTO IP: on; MANUAL IP: off).
- When connecting the PC directly to the PMX-E series, set it to "010" (DHCP: off; AUTO IP: on; MANUAL IP: off) to enable automatic IP address setting.
- To set the IP address manually, set it to "001" (DHCP: off; AUTO IP: off; MANUAL IP: on) and set the IP address (CF 62 to CF65).

For details, see "CONFIG settings related to IP address assignment" *(p.16)*.

6 **Turn on the POWER switch again.**

The settings are applied.

CONFIG settings related to IP address assignment

Parameter number	Options	Description
CF61	001 010 011 100 101 111 110	Sets the IP address assignment method. Assigns 0 (off) or 1 (on) to the three items of DHCP, Auto-IP, and MANUAL IP in the following order. DHCP (server assignment) Auto-IP (self-assignment) MANUAL IP (manual assignment) XXX
CF62 CF63 CF64 CF65	0 to 255	CF62 to CF65 set the MANUAL IP addresses in the following order. XXX.XXX.XXX.XXX CF62 CF63 CF64 CF65
CF66	16 to 31	Sets the subnet mask prefix. Ex: 255.255.0.0 for 16

- If DHCP and AUTO IP are both set to on and an IP address is not assigned through a DHCP server, AUTO IP is used.
- If the DHCP server function is not used, it takes about 60 seconds until determination that address assignment with DHCP has failed. Then, a link-local address (Auto-IP) of 169.254.x.x (x: 1 to 254) is set. If you are connecting directly without using a router, turn off the DHCP to shorten the time it takes to obtain an address.
- To use MANUAL IP, set DHCP and AUTO IP to off. The address that is assigned by the AUTO IP function is 169.254.x.x (where x is a number between 1 and 254).
- To apply the LAN interface settings (CF61 to CF66), execute APPL (APPL) in CF60 or turn the POWER switch off and on again.

Service request

This product is equipped with service request and serial polling functions.

LAN specifications

Compliant with the 1.5 LXI Device Specification 2016.

Complies with the SCPI-Telnet, VXI-11, HiSLIP, and SCPI-RAW protocols

Baud rate: 100 Mbps maximum (auto negotiation)

AUTO MDIX

Web Browser Interface Operations

Displaying instrument, network, and VISA resource information; verifying connected PMX-E series; remote operation from the browser; changing network settings; system information, license information, and password settings; and modifying preset memory settings.

Restarting the LAN interface

You can restart the LAN interface using the CONFIG settings. The LAN interface settings will not change even if you restart the system (if you change the CF61 to CF66 settings, the changes will be applied after the restart).This does not affect the panel settings of the PMX-E series. If the PMX-E series is in remote mode, it enters the local mode (panel operation mode) by switch operations.

1 **Hold down the CONFIG key until CF60 appears.**
The CONFIG key will light up and the SET key will blink.

2 **Turn the CURRENT knob to select APPL (apply the LAN settings).**

3 **Press the SET key again.**
CF60 (CF60) and APPL (APPL) indicators will also blink.

4 **To restart it, press the SET key again. Otherwise, press the CONFIG key.**

Resetting the LAN interface

When reset, network settings are changed as follows. You can use this if you forget the security password or IP address.
This does not affect the panel settings of the PMX-E series. If the PMX-E series is in remote mode, it enters the local mode (panel operation mode) by switch operations. The items with an ○ mark are returned to their default values.

LCI	DEF	Item	Default value
○	○	Assignment Method	DHCP:ON, Auto-IP:ON, MANUAL IP:OFF
–	○	DNS Server Assignment	0.0.0.0
–	○	WINS Server Assignment	0.0.0.0
–	○	Desired Hostname	<Model name> - <Last 5 digits of serial number>
–	○	Desired Description	KIKUSUI <model name> DC Power Supply - <serial number>
○	○	Enable Dynamic DNS	Enable
○	○	Enable mDNS	Enable
○	○	Enable NetBIOS Over TCP/IP	Enable
○	○	Password for the Web browser interface	Not set

1 **Hold down the CONFIG key until CF60 appears.**
The CONFIG key will light up and the SET key will blink.

2 **Turn the CURRENT knob to select LCI (reset the LAN settings).**

3 **Press the SET key again.**
CF60 (CF60) and LCI (LCI) indicators will also blink.

4 **To reset it, press the SET key again. Otherwise, press the CONFIG key.**

NOTE

Restart the computer after resetting to the factory default settings. You see a "-315 Configuration memory lost", which is not abnormal.Use a *CLS command or turn the power back on to clear the error.

Accessing and Operating the Product from a Web Browser (LAN)

You can configure the LAN interface in detail using your PC's browser. In addition, the virtual front panel is available to perform the same operations as on the main unit's front panel.

Use the latest version of your browser (recommended browsers: Edge, Chrome, Safari)

Access the Web browser interface

Enter the URL in the address bar of the browser.

The URL of the Web browser interface is the IP address of the PMX-E series preceded by "http://". You can use the CONFIG settings (CF50 to CF53) to check the IP address.

Parameter number	Display	Description
CF50	0 to 255	Displays the first octet of the IP address
CF51	0 to 255	Displays the second octet of the IP address
CF52	0 to 255	Displays the third octet of the IP address
CF53	0 to 255	Displays the fourth octet of the IP address

Example: When the IP address is 169.254.7.8

http://169.254.7.8

Search by VISA Application

If a VISA library is in use, the Web browser interface will open if you search for VXI-11 measuring instrument with the applications provided by each VISA vendor (National Instruments NI-MAX, Keysight Connection Expert, Kikusui KI-VISA Instrument Explorer, or the like) and click on the web link from the search results.

WELCOME page

When you connect to the Web browser interface, a WELCOME page appears first.

It shows the instrument, network, and VISA resource (I/O resource) information. Click the navigation menu to go to another page.

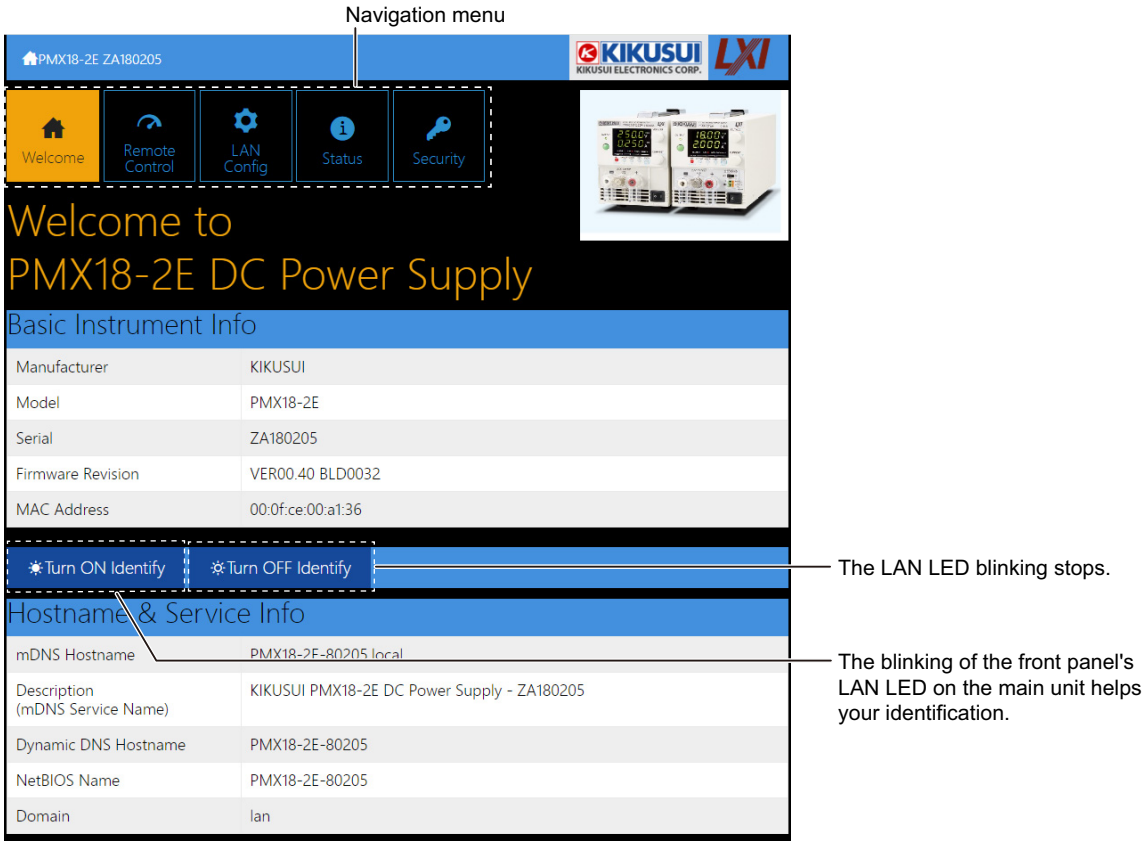

Turn ON Identify

The LAN LED on the PMX-E front panel of the connected PMX-E series will blink to allow you to identify it.

Turn OFF Identify

The LAN LED blinking stops.

Remote Control page (virtual front panel)

⚠WARNING

Risk of death or injury.

- **Before touching the output terminal or connecting the DUT, always confirm the condition of the instrument.**
  When a problem occurs in the network, the information displayed in the browser may differ from the actual state of the device. As a result, an unexpected dangerous voltage may occur that may cause human death or injury, or physical damage to the DUT and so on.

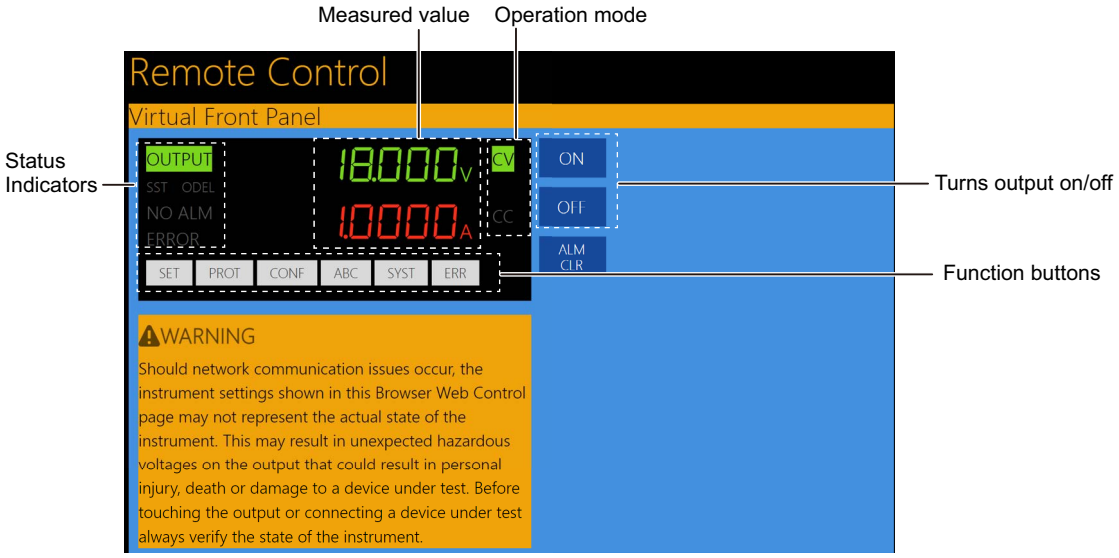

Status Indicators

OUTPUT: When the output is on, the background turns green.
SST: During the soft start and stop times is operation, the background turns green.
ODEL: During the output-on delay and -off delay times is operation, the background turns orange.
NO ALM: When an alarm occurs, the background turns red, indicating the cause of the alarm is displayed.
ERROR: When an error occurs, the background turns orange.

Function buttons

These allow you to select the same functions as those on the main unit's front panel.

SET

Sets the output the output voltage and current. Enter a value in each box and click Enter.
Refresh: Immediately applies the changes made on the main unit's front pane to the virtual front panel.

PROT

Sets the OVP and OCP trip points. Enter a value in each box and click Enter.
Refresh: Immediately applies the changes made on the main unit's front pane to the virtual front panel.
ALM CLR: Clears OVP, OCP, OHP, EXT, ALIN, WDOG.

CONF

Sets CONFIG parameters. For CONFIG settings on the settings, refer to the User's Manual.
Refresh: Immediately applies the changes made on the main unit's front pane to the virtual front panel.
RST: Executes configuration parameter CF00 (reset panel settings).

ABC

Accesses the preset memory. Select "Memory Action" and then click memory "A", "B" or "C" as the target.

Preview: Previews the settings of the selected memory.

Recall: Recalls the settings from the selected memory.

Save: Saves the settings to the selected memory.

SYST

Panel Keylock: Locks the panel operations of the main unit. When you turn on the lock, the operations are limited to those selected in the key lock setting (CF03).

Panel Remote:

Local: Allows the use of both the main unit's front panel and the virtual front panel.

Remote: Allows the use of only the virtual front panel.(When you press the main unit's LOCAL key, it will momentarily enter the local mode described above, then immediately return to the remote mode. After closing the browser, you can return to local mode by pressing the LOCAL key.)

Lockout: Allows the use of only the virtual front panel.

Refresh: Immediately applies the changes made on the main unit's front pane to the virtual front panel.

ERR

Can view the error code *(p.89)* when an error occurs.

The "ERROR" appearing in the status display area does not disappear until you confirm the error code.

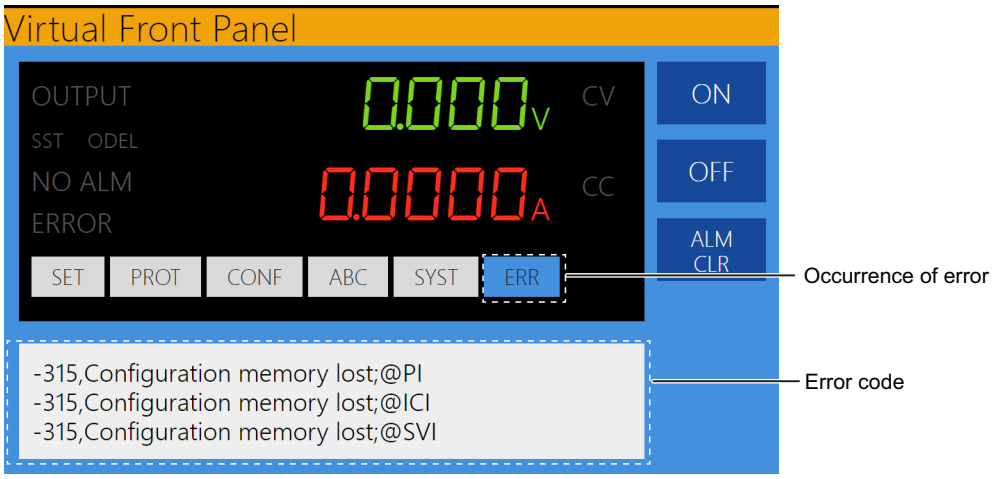

NOTE

Restart the computer after resetting to the factory default settings. You see a "-315 Configuration memory lost", which is not abnormal.Use a *CLS command or turn the power back on to clear the error.

LAN Configuration page

You can display (View Mode) and change (Modify Mode) the network settings.

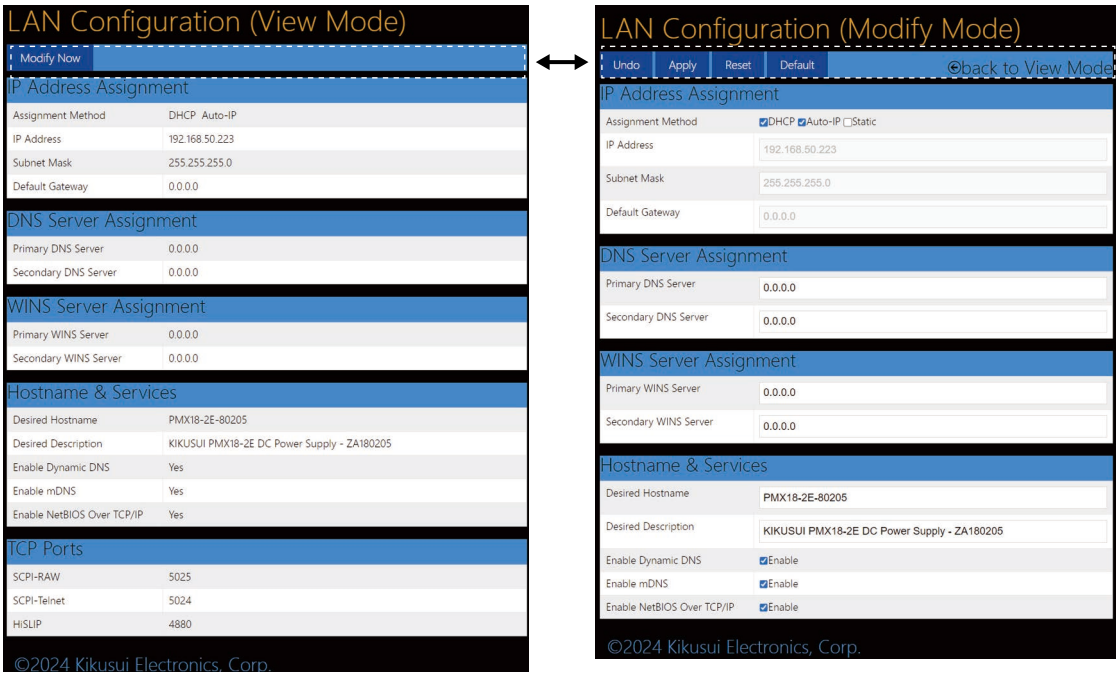

Navigation (View Mode)

Modify Now: Brings you to the network setting parameter editing screen (Modify Mode).

Navigation (Modify Mode)

Undo: Reverts the edited settings to its previous state.

Apply: Applies the edited settings.

Reset: Resets the network settings.

Default: Returns the network settings to the factory default settings.

Back to View Mode: Changes to the network setting parameter view screen (View Mode).

IP Address Assignment

You can set the IP address. You can choose between automatic assignment and assignment of a fixed address.

In the case of automatic assignment of IP address, we recommend using the DHCP server function using a router as far as possible.

If the DHCP server function is not used, it takes about 60 seconds until determination that address assignment with DHCP has failed. Then, an address between 169.254.0.0 to 169.254.255.255 is assigned by link local address (Auto-IP).

DNS Server Assignment

Sets the address of the DNS server.

WINS Server Assignment

Sets the address of the WINS server.

Hostname & Services

You can set the host name and so on. If you set the host name, you can use it in place of the IP address to access the LAN interface. Normally, we recommend that you select “Enable Dynamic DNS”, “Enable mDNS”, and “Enable NetBIOS Over TCP/IP”.

If you leave the Hostname and Description boxes empty and click “Apply,” the host name will be created from the model name and serial number.

TCP Ports (View Mode)

The number of the TCP port in use is displayed. You cannot change the port number.

Reset and factory default settings

If you click Reset or Default, network settings are changed as follows.
The items with an ○ mark are returned to their default values.

Reset	Default	Item	Default value
○	○	Assignment Method	DHCP:ON, Auto-IP:ON, Static:OFF
–	○	DNS Server Assignment	0.0.0.0
–	○	WINS Server Assignment	0.0.0.0
–	○	Desired Hostname	<Model name> - <Last 5 digits of serial number>
–	○	Desired Description	KIKUSUI <model name> DC Power Supply - <serial number>
○	○	Enable Dynamic DNS	Enable
○	○	Enable mDNS	Enable
○	○	Enable NetBIOS Over TCP/IP	Enable

System Status page

Displays the license information of the open-source software.

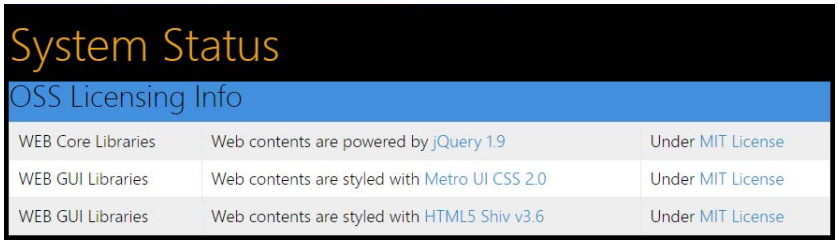

Password Security page

You can set and change the password for the Web browser interface here.

NOTE

The password function of the Web browser interface does not limit communication using VXI-11, HiSLIP/, SCPI-RAW, or HTTP Request protocol. If there is a risk of being attacked by aiming at the vulnerability, take appropriate measures referring to the notes on using the PMX-E series with a LAN interface *(p.14)*.

When a password has been set, that password is required in order to use the following functions.

- Remote Control page (virtual front panel)
- LAN Configuration page (various settings in Modify Mode)
- Changing/deleting the password

Set New Password

Enter the password.

You can use alphanumeric characters, hyphens, and underscores for the password. The number of characters of the password is four to 15 characters.

Changing/deleting the password

After the password has been set, the screen for changing the password appears when you enter the password.

To change the password, enter the present password in “Current Password”, enter the new password in “New Password” and “Confirm Password”, and then click “Apply”.

To disable password protection, enter the present password in “Current Password”, leave “New Password” and “Confirm Password” blank, and click “Apply”.

If you forget the password

If you forget the password, reset the LAN interface setting in the CONFIG settings (CF60) or initialize the product to its factory default settings. For CONFIG settings on the settings, refer to the User’s Manual.

About Commands

The information transferred between the controller (PC) and this instrument is called messages. The PMX-E series uses the SCPI language for these messages.
Some of the messages consist of commands sent from the PC to a device, while others consist of responses sent from the device to the PC.

Command Hierarchy

SCPI is an ASCII-based command language that was designed for test and measuring equipment. The command structure is composed of the common roots or nodes that are the building blocks of the SCPI subsystem. A command consists of a program header, parameters, and punctuation marks.
The following table uses the SOURce subsystem as an example to explain the hierarchy.

Program header	Parameter	Node level
[:SOUR]		Root node
:CURR		2nd level
:EXT		3rd level
:SOUR	<boolean>	4th level
:VOLT		2nd level
:PROT		3rd level
[:LEV]	<numeric>	4th level

A colon (:) separates a higher node from a lower node.

Command Syntax

In this manual, SCPI commands are expressed in the following format.

```
[SOURce:]CURRent[:LEVel][:IMMediate][:AMPLitude]{<numeric>|MINimum|MAXimum}
```

SCPI commands are also available in the short form. In the short form, the lowercase characters in SCPI commands are omitted.

SCPI commands can be sent either in the long form or short form. Because SCPI commands are not case-sensitive, VOLT, Volt, and volt are all acceptable as short form notations. In the long form, VOLTAGE, Voltage, and voltage are all acceptable.

- A space separates a program header and its parameters.
- Multiple parameters are separated by commas.
- Multiple commands are separated by semicolons (compound command).

```
SOURce:CURRent MINimum;VOLTage MINimum
```

SOURce is omitted from the second command because the path is specified as SOURce in the first command, SOURce:CURRent.

This compound command is equivalent to entering the following commands.

```
SOURce:CURRent MINimum
SOURce:VOLTage MINimum
```

If you specify a node that is not defined in the current path, an error will occur.

By using colons and semicolons, you can concatenate commands of different subsystems.

```
SOURce:CURRent MINimum;:MEASure:CURRent?
```

There are two root nodes in this compound command: SOURce and MEASure.

When the second command or later begins with a colon, the path that was specified by the previous command is cleared. The maximum length of a command that you can transmit on a single line is 512 bytes.

Special symbols

The special symbols that are used in this manual for the SCPI command syntax are explained below.

- Characters and numbers enclosed by { } and delimited by “|” indicate that one of the delimited items is to be selected. Do not include the { } symbols in the actual program.
- The symbols <> represent program data.Do not include them in your program code.
- The symbol [ ] denotes optional data. When optional data is not sent with the program, the default setting is applied.Do not include [ ] in your program code.

Query

You can query the device settings and status. To make a query, append a question mark (?) to the end of the program header section. If the query has parameters, insert a space after the question mark, and then write the parameters.

```
CURRent? MIN
```

Response

This is the response to a query. It is a message always sent from the device to the PC. It conveys device status or measured value to the PC.

NOTE

If you want to send two queries on separate lines, send the second query after you have received the response to the first one.

Program terminator

All commands must be terminated with a valid terminator.

	RS232C	USB	LAN	
			VXI-11, HiSLIP	SCPI-RAW
Receiving	LF	LF or EOM	LF or END	LF
Sending	LF or CR+LF	LF+EOM	LF+END	LF

When you terminate a command string, the path is reset to the root level.

NOTE

CR (ASCII 0x0D) is not a terminator.

Common commands

There are commands that are common to the IEEE488.2 and SCPI standards for functions such as resetting devices and performing self-diagnoses. These common commands start with an asterisk (“*”). These commands may have one or multiple parameters.

Parameter

The SCPI parameter format is derived from the program parameter format that is defined in IEEE 488.2. The program data expression format that the PMX-E series uses is shown below.

Non-numeric parameters

String data (String)

String data is used when a series of ASCII characters (20H to 7EH) are requested.

Enclose strings in single (‘’) or double quotation (“”) marks. The opening and closing quotation marks must match (you cannot mix single and double quotation marks).

```
SYSTem:LANGuage "SCPI"
```

If you want to include a quotation mark as part of the string, enter consecutive quotation marks (with no characters between them).

Character data (Character)

Character data is used when only a limited number of values are available for a program setting. Responses return in short form.

```
:TRIGger:ACQuire:SOURce {IMMediate|BUS}
```

Boolean data (Boolean)

Boolean data is used to express a condition of 1 or 0, or ON or OFF. The response will be 1 or 0.

```
:SYSTem:KLOCK {ON|OFF|1|0}
```

Numeric parameters

NR1, NR2, and NR3 are explained in detail in the IEEE Std 488.2 standard, which is the first item in Measuring instrument interface standards *(p.9)*.

NR1

Represents an integer value.

If a 0 is returned in the response data, it is returned as +0.

NR2

Represents a real number in floating-point format.

NR3

Represents a real number in scientific notation.

If 380 is returned in the response data, it is returned as +3.80000E+02. Five decimal places are used.

NRf

NRf is a generic term that includes NR1, NR2, and NR3.

Numeric

Numeric parameter for values such as the decimal point, optional prefixes, and measurement units.

Numbers are expressed the same as NRf. MINimum, MAXimum, and the like are available as substitutes for declaring certain values.

You can also use units such as V, A, and W in numeric parameters.

If a value that cannot be assigned is entered, the device rounds the value to the closest possible value.

```
OUT:DEL:ON 1.22
```

Since the setting resolution of the output-on delay is 0.1, +1.20000E+00 returns in response to OUTP:DEL:ON?.

Substitutes (Minimum value, Maximum value)

In the PMX-E series, when a parameter is Numeric, the minimum value (MINimum) and maximum value (MAXimum) are defined as substitutes.

The following example sets the overcurrent protection value to the minimum value.

```
CURRent:PROTection MINimum
```

You can query the minimum and maximum values for most parameters.

```
CURRent:PROTection? MAX
CURRent:PROTection? MIN
```

Measurement units

The default measurement units are listed below. Commands are accepted even if measurement units are not specified.

- V (voltage)
- A (current)
- HR (hours)
- MIN (minutes)
- S (seconds)

The following optional prefixes are supported. If you use optional prefixes, specify the measurement unit.

- K (kilo)
- M (milli)
- U (micro)

NOTE

- The unit symbols in the International System of Units contain lowercase characters. The IEEE standard uses uppercase characters. SCPI commands are not case sensitive.
- Commands are accepted whether or not measurement units are specified.
- To enter "μ" in the data, use "U" instead.

IEEE 488.2 common commands

Applicable commonly to the units conforming to IEEE488.2.

*CLS

Clears all event registers including the status byte, event status, and error queue.
Clears the operation complete standby that was created by the *OPC or *OPC? command.

Command

```
*CLS
```

*ESE

Sets the event status enable register that is counted by the event summary bit (ESB) of the status byte.

Command

```
*ESE <NRf>
*ESE?
```

Parameter

Set value: 0 to 255

Response

NR1

Example

When *ESE 16 is transmitted, bit 4 of the event status enable register is set. Each time the execution error bit (bit 4) of the event status register is set, the summary bit (ESB) of the status byte is set.

*ESR?

Queries the event status register.
The event status register is cleared when read.

Command

```
*ESR?
```

Response

NR1

*IDN?

Queries the model name and firmware version of this product.

Command

```
*IDN?
```

Response

Response example: Model name PMX18-2E, serial number AB123456, firmware version 1.00, build number 0016.

```
KIKUSUI,PMX18-2E,AB123456,VER01.00.BLD0016
```

*LRN?

Queries the command that can restore the current panel settings.
Values to be restored are those affected by the *RST command.

Command

```
*LRN?
```

Response

The panel setting restore command returns as an ASCII string.

*OPC

Sets the OPC bit (bit 0) of the event status register when all the commands that are in standby have been processed.
See IEEE 488.2-1992 section 12.5.3.

Command

```
*OPC
*OPC?
```

Response

Returns "1" when the processing of all queued commands has been complete.

*OPT?

Queries the installed options.

Command

```
*OPT?
```

Response

Models equipped with the high-speed rising/falling function (factory option) return "HISPEED". The others return "0".

*PSC

Sets whether the event status enable register and service request enable register are cleared when the POWER switch is turned on.

Command

```
*PSC <boolean>
*PSC?
```

Parameter <boolean>

Set value:	ON (1)	When the POWER switch is turned on, the *ESE and *SRE settings are cleared.
	OFF (0)	When the POWER switch is turned on, the *ESE and *SRE settings are not cleared.

Response

The power-on status setting returns as NR1.

Example

Example: To enable the power-on SRQ function:

```
*PSC 0;*SRE 32;*ESE 128
```

*RCL

Recalls settings from a set memory. If a set memory is recalled while the output is off, the settings will be applied according to the settings saved in the set memory.

When you recall a set memory that was set while the output is on, the settings will be applied with the content saved in the set memory and will also be immediately applied to the output. The soft start and stop times and the output-on and -off delay times will be applied the next time the output turns on.

For the target parameters, refer to “List of *RCL, *RST, and *SAV parameters targeted for set memory” *(p.35)*.

Command

```
*RCL <NRf>
```

Parameter <NRf>

Set value:	1	Memory A
	2	Memory B
	3	Memory C

Example

```
*RCL 2
```

*RST

Initializes the settings targeted for the set memory.

Clears alarms (if they cannot be cleared, alarms continue). Cancels the trigger subsystem operation. Clears the OPC bit (bit 0) of the status event register.

For the target parameters, refer to “List of *RCL, *RST, and *SAV parameters targeted for set memory” *(p.35)*.

Command

```
*RST
```

*SAV

Saves the current settings to the set memory.

For the target parameters, refer to “List of *RCL, *RST, and *SAV parameters targeted for set memory” *(p.35)*.

Command

```
*SAV <NRf>
```

Parameter <NRf>

Set value:	1	Memory A
	2	Memory B
	3	Memory C

Example

```
*SAV 3
```

*SRE

Sets the service request enable register.

The service request enable register can be used to select which summary messages in the status byte register will perform service requests.

To clear the service request enable register, send *SRE 0. If the register is cleared, service requests cannot be generated using status information.

Command

```
*SRE <NRf>
*SRE?
```

Parameter

Set value: 0 to 255

Response

NR1

Example

Sending *SRE 8 sets bit 3 of the service request enable register. Each time the summary bit (bit 3) of the QUEStionable status register in the status byte is set, a service request message is generated.

*STB?

Queries the contents of the status byte register and the MSS (master summary status) message.
The response is the same as serial polling only with the exception that the MSS message appears in place of the RQS message in bit 6.

Command

```
*STB?
```

Response

NR1

*TRG

Trigger command.

- Executes triggers on the TRANsient trigger group and ACQuire trigger group.
- This is a substitute command for IEEE 488.1 get (Group Execute Trigger).
- If the device is in a state in which it does not accept triggers, an SCPI error (-211, “Trigger ignored”) occurs.
- See IEEE 488.2-1992 section 10.37.

Command

```
*TRG
```

*TST?

Executes a self-test.
You can check which error occurred with SYST:ERR? command. See IEEE 488.2-1992 section 10.38.

Command

```
*TST?
```

Response

For no problem, "0" returns. Otherwise, an error code returns.

*WAI

Subsequent commands will not be executed until all pending operations are completed.

Command

```
*WAI
```

List of *RCL, *RST, and *SAV parameters targeted for set memory

Description	*Value when RST is transmitted
OUTPut	OFF
OUTPut:DELay:ON	0.0[s]
OUTPut:DELay:OFF	0.0[s]
OUTPut:EXTernal	OFF
[SOURce:]CURRent	MAXimum
[SOURce:]CURRent:EXTernal:SOURce	NONE
[SOURce:]CURRent:LIMit:AUTO	ON
[SOURce:]CURRent:PROTection	MAXimum
[SOURce:]CURRent:SSTart:FALL	0.0[s]
[SOURce:]CURRent:SSTart:RISE	0.0[s]
[SOURce:]CURRent:TRIGgered	MAXimum
[SOURce:]POWer:LIMit:AUTO	0 (no power limit)
[SOURce:]VOLTage	0.0[V]
[SOURce:]VOLTage:EXTernal:SOURce	NONE
[SOURce:]VOLTage:LIMit:AUTO	ON
[SOURce:]VOLTage:PROTection	MAXimum
[SOURce:]VOLTage:SSTart:FALL	0.0[s]
[SOURce:]VOLTage:SSTart:RISE	0.0[s]
[SOURce:]VOLTage:TRIGgered	0.0[V]
TRIGger:TRANsient:SOURce	IMMediate

ABORt Command

This command aborts the setting change operation.

ABOR

Aborts the setting change operation.
Immediately after you turn on the POWER switch, the trigger state is the same as when the ABOR command is sent.

Command

```
ABORt[:ALL]
```

ABOR:TRAN

Aborts the setting change operation.

Command

```
ABORt:TRANsient
```

DISPlay Command

Sets the brightness of the panel display.

DISP:BRIG

Sets the panel display brightness.

Command

```
DISPlay:BRIGhtness <NRf>
DISPlay:BRIGhtness?
```

Parameter

Set value: 1 to 6 1: minimum to 6: maximum brightness (The default value is 6)

Response

NR1

Example

```
DISP:BRIG 4
```

INITiate Command

Starts trigger function.

INIT:TRAN

Starts the transient trigger function, which changes settings.
The setting will be changed immediately if the trigger source is set to IMM, or will wait for a software trigger if it is set to BUS.

Command

```
INITiate[:IMMediate]:TRANsient
```

Related command

TRIG:TRAN:SOUR

INSTrument Command

Relates to the operation target information.

INST:INFO?

Queries information about the current operation target.

Command

```
INSTrument:INFO?
```

Response

The maximum voltage, maximum current, maximum power, and model name of the operation target return in NR3 format in order.

Response example:

When sending a query with the PMX18-2E (maximum voltage 18 V, maximum current 2 A, maximum power 36 W) as the operation target,

```
Returns +1.80000E+01,+2.00000E+00,+3.60000E+01,PMX18-2E.
```

MEASure/FETCh Command

The PMX-E series does not support multi-channel.

MEASure and FETCh are aliases and operate in the same manner. Queries the latest measured value when the command is sent.

See the tutorial “Setup and measurement” *(p.80)*.

MEAS:ALL?/ FETC:ALL?

Queries the current and voltage.

Command

```
MEASure[:SCALar]:ALL?
FETCh[:SCALar]:ALL?
```

Response

The current and voltage values return in order, separated by commas. Unit: A (current), V (voltage)

Current value <NR3>,voltage value <NR3>

MEAS:CURR?/ FETC:CURR?

Queries the current.

Command

```
MEASure[:SCALar]:CURRent[:DC]?
FETCh[:SCALar]:CURRent[:DC]?
```

Response

NR3

Unit: A

Measured values are updated every 200 ms.

MEAS:VOLT?/ FETC:VOLT?

Queries the voltage.

Command

```
MEASure[:SCALar]:VOLTage[:DC]?
FETCh[:SCALar]:VOLTage[:DC]?
```

Response

NR3

Unit: V

Measured values are updated every 200 ms.

MEMory Command

Relates to the preset memory.

MEM:REC

Recalls settings from the preset memory (A, B, C).

The items that will be saved are the current value, voltage value, OCP, OVP, CC soft start, CC soft stop, CV soft start, CV soft stop, output-on delay, and output-off delay settings.

If you recall a preset memory when the output is off, the settings will be applied according to the settings saved in the preset memory.

When you recall a preset memory that was set during output on, the settings will be applied with the content saved in the preset memory and will also be immediately applied to the output. The soft start and stop times and the output-on and -off delay times will be applied the next time the output turns on.

You can use MEM:REC:PREV? to view the content stored in the preset memory.

Command

```
MEMory:RECall[:IMMediate] <NRf>
```

Parameter

Set value:	1	Memory A
	2	Memory B
	3	Memory C

Example

```
MEM:REC 2
```

MEM:REC:CONF

Sets whether display the settings saved in the memory before recalling the preset memory via panel operation.

Regardless of this setting, if you recall a preset memory with MEM:REC, the setting values will be recalled immediately.

Command

```
MEMory:RECall:CONFirmation <boolean>
MEMory:RECall:CONFirmation?
```

Parameter

Set value:	ON(1)	Displayed (default).
	OFF(0)	Not displayed.

Response

NR1

Example

```
MEM:REC:CONF ON
```

MEM:REC:PREV?

Queries the settings stored in preset memories A, B, and C.

Command

```
MEMory:RECall:PREView? <NRf>
```

Parameter

Set value:	1	Memory A
	2	Memory B
	3	Memory C

Response

The following setting values return in order, separated by commas.
Current value <NR3>, voltage value <NR3>, OCP<NR3>, OVP<NR3>, CC soft start <NR3>, CC soft stop <NR3>, CV soft start <NR3>, CV soft stop <NR3>, output-on delay <NR3>, output-off delay <NR3>.

Response example:

If the settings stored in memory A are current 1 A, voltage 10 V, OCP 2 A, OVP 11 V, CC soft start 1 S, CC soft stop 1 S, CV soft start 1 S, CV soft stop 1 S, output-on delay 1 S, and output-off delay 0 S:
For current value 1 A, voltage value 10 V, OCP 2 A, and OVP 11 V:
+1.00000E+00,+1.00000E+01,+2.00000E+00,+1.10000E+01,
+1.00000E+00,+1.00000E+00,+1.00000E+00,+1.00000E+00,
+1.00000E+00,+0.00000E+00

MEM:SEQ

Set the memory sequence function to enabled/disabled.

Command

```
MEMory:SEQuence[:STATe] <boolean>
MEMory:SEQuence[:STATe]?
```

Parameter

Set value:	ON(1)	Enable.
	OFF(0)	Disable. (default)

Response

NR1

Example

```
MEM:SEQ ON
```

MEM:SEQ:TIME{A|B|C}:ENAB

Enables/disables preset memories A, B, and C in the memory sequence function.

Command

```
MEMory:SEQuence:TIME{A|B|C}:ENABle <boolean>
MEMory:SEQuence:TIME{A|B|C}:ENABle?
```

Parameter

Set value:	ON(1)	Enable. (default)
	OFF(0)	Disable.

If the memory sequence function conditions are set to disabled, an SCPI error (+390, "Invalid MEMORY SEQUENCE Set Value") will occur. *(p.92)*

Response

NR1

Example

```
MEM:SEQ:TIMEA:ENAB ON
```

MEM:SEQ:TIME{A|B|C}

Sets the output time for preset memories A, B, and C in the memory sequence function.

Command

```
MEMory:SEQuence:TIME{A|B|C} <numeric>
MEMory:SEQuence:TIME{A|B|C}?
```

Parameter

Set value: 0.00 to 9999
Unit: S
An SCPI error (-222, “Data out of range”) occurs if the specified value is out of range.

Response

NR3

Example

```
MEM:SEQ:TIMEA 100.5
```

MEM:SEQ:LOOP

Sets the repetition count for the memory sequence function.

Command

```
MEMory:SEQuence:LOOP <numeric>
MEMory:SEQuence:LOOP?
```

Parameter

Set value:	0	Infinite
	1 to 9999	Repetition count (The default value is 1)

An SCPI error (-222, “Data out of range”) occurs if the specified value is out of range.

Response

NR3

Example

```
MEM:SEQ:LOOP 10
```

MEM:SAVE

Saves the settings to the preset memory.
The items saved are the current value, voltage value, OCP, OVP, CC soft start, CC soft stop, CV soft start, CV soft stop, output-on delay, and output-off delay settings.

Command

```
MEMory:SAVE[:IMMediate] <NRf>
```

Parameter

Set value:	1	Memory A
	2	Memory B
	3	Memory C

Example

```
MEM:SAVE 3
```

OUTPut Command

An output-related command.

OUTP

Sets the output to on or off.
This command is disabled when a protection function is active.

Command

```
OUTPut[:STATe][:IMMediate] <boolean>
OUTPut[:STATe][:IMMediate]?
```

Parameter

Set value:	ON (1)	Output on
	OFF (0)	Output off (default)

Settings are reset to default when the *RST command is sent.

Response

NR1

Example

```
OUTP 1
```

OUTP:DEL:ON

Sets the output-on delay.

Command

```
OUTPut:DELay:ON <numeric>
OUTPut:DELay:ON?
```

Parameter

Set value:	0	No delay time (default)
	0.5 to 99.9	Delay time inserted

Settings are reset to default when the *RST command is sent.
Unit: S
An SCPI error (-222, “Data out of range”) occurs if the specified value is out of range.

Response

NR3

Example

```
OUTP:DEL:ON 1.2
```

OUTP:DEL:OFF

Sets the output-off delay.

Command

```
OUTPut:DELay:OFF <numeric>
OUTPut:DELay:OFF?
```

Parameter

Set value:	0	No delay time (default)
	0.5 to 99.9	Delay time inserted

Settings are reset to default when the *RST command is sent.
Unit: S
An SCPI error (-222, “Data out of range”) occurs if the specified value is out of range.

Response

NR3

Example

```
OUTP:DEL:OFF 1.2
```

OUTP:EXT

This is an old style command.
When creating a new program, use OUTP:EXT:ADV.

Command

```
OUTPut:EXTernal[:STATe] <boolean>
OUTPut:EXTernal[:STATe]?
```

Settings are reset to default when the *RST command is sent.

Response

NR1

OUTP:EXT:ADV

Sets whether output will be turned on and off externally.
Set the external control logic with OUTP:EXT:LOG.

Command

```
OUTPut:EXTernal[:STATe]:ADVance <character>
OUTPut:EXTernal[:STATe]:ADVance?
```

Parameter

Set value:	ON	External control used The output-on delay and -off delay and soft start and stop functions are unused.
	ENHanced	External control used The output-on delay, -off delay and soft start and stop functions are used.
	OFF	External control not used (default)

Settings are reset to default when the *RST command is sent.

Response

character

Example

```
OUTP:EXT:ADV ON
```

OUTP:EXT:LOG

Sets the logic for turning on/off the output via external control.

Command

```
OUTPut:EXTernal:LOGic <character>
OUTPut:EXTernal:LOGic?
```

Parameter

Set value:	Low	LOW or shorting turns on the output (default).
	HIGH	The output is turned on with a high-level signal or open circuit.

Response

character

Example

```
OUTP:EXT:LOG HIGH
```

OUTP:PON

Sets the output condition that the PMX-E series will be in when the power is turned on.

Command

```
OUTPut:PON[:STATe] <character>
OUTPut:PON[:STATe]?
```

Parameter

Set value:	SAFE	Rising in the same state as when the POWER switch was last turned off. The output is off (default).
	AUTO	Rising in the same state as when the POWER switch was last turned off, including output on/off.
	FORCe	Rising in the same state as when the POWER switch was last turned off. The output is on.

Response

character

Example

```
OUTP:PON AUTO
```

OUTP:PROT:CLE

Clears alarms.

Command

```
OUTPut:PROTection:CLEar
```

OUTP:PROT:WDOG

Sets the communication monitoring (WATCHDOG) timer.
When an alarm occurs, set the value to 0 before clearing the alarm.

Command

```
OUTPut:PROTection:WDOG[:DELay] <numeric>
OUTPut:PROTection:WDOG[:DELay]?
```

Parameter

Set value:	0	Communication monitoring function off (default)
	1, 3, 10, 30, 100, 300, 1000, 3000	Communication monitoring function on If a value that cannot be set is specified, the next higher value is set. (Example) If OUTP:PROT:WDOG 31 is specified, 100 is set.

Unit: S
An SCPI error (-222, “Data out of range”) occurs if the specified value is out of range.

Response

NR3

Example

```
OUTP:PROT:WDOG 30
```

Related command

OUTP:PROT:CLE

OUTP:OFFT

Sets the output-off timer function to enabled/disabled.

Command

```
OUTPut:OFFTimer[:STATe] <boolean>
OUTPut:OFFTimer[:STATe]?
```

Parameter

Set value:	ON (1)	Enable.
	OFF (0)	Disable. (default)

If the output-off timer conditions are set to disabled, an SCPI error (+380, "Invalid OUTPUT TIMER OFF Set Value") will occur *(p.92)*

Response

NR1

Example

```
OUTP:OFFT ON
```

OUTP:OFFT:TIM

Sets the output-off timer time.

Command

```
OUTPut:OFFTimer:TIMer <numeric>
OUTPut:OFFTimer:TIMer?
```

Parameter

Set value:	0	No time setting for output-off timer (default)
	1 to 359999	These set the output-off timer time.

Unit: S
An SCPI error (-222, “Data out of range”) occurs if the specified value is out of range.

Response

NR3

Example

```
OUTP:OFFT:TIM 60
```

OUTP:OFFT:TIM:REM?

Queries the remaining time of the output-off timer after the output turns on.

Command

```
OUTPut:OFFTimer:TIMer:REMaining?
```

Response

NR3

OUTP:OFFT:CVCC

Sets the trigger operation mode for the output-off timer function.

Command

```
OUTPut:OFFTimer:CVCC {NONE|CV|CC}
OUTPut:OFFTimer:CVCC?
```

Parameter

Set value:	NONE	No condition
	CV	Constant voltage mode
	CC	Constant current mode

Response

character

Example

```
OUTP:OFFT:CVCC CV
```

OUTP:OFFT:CVCC:TIM

Sets the output-off timer after the trigger operation mode starts.

Command

```
OUTPut:OFFTimer:CVCC:TIMer <numeric>
OUTPut:OFFTimer:CVCC:TIMer?
```

Parameter

Set value:	0	No time setting for output-off timer (default)
	1 to 359999	These set the output-off timer time.

Unit: S
An SCPI error (-222, “Data out of range”) occurs if the specified value is out of range.

Response

NR3

OUTP:OFFT:INV:TIM

Sets the duration to be excluded from the output-off timer after the output turns on.

Command

```
OUTPut:OFFTimer:INValid:TIMer <numeric>
OUTPut:OFFTimer:INValid:TIMer?
```

Parameter

Set value: 0.0 to 60.0(The default value is 1.0)
Unit: S
An SCPI error (-222, “Data out of range”) occurs if the specified value is out of range.

Response

NR3

Example

```
OUTP:OFFT:INV:TIM 5
```

[SOURce:]POWer Command

Relates to the output power limit value.

POW:LIM:AUTO

Sets the output power limit value.

Command

```
[SOURce:]POWer:LIMit:AUTO <numeric>
[SOURce:]POWer:LIMit:AUTO?
```

Parameter

Set value:	0	Output power not limited (default)
	1 W to 105 % of the rated output power	Output power limited

Unit: W

An SCPI error (-222, “Data out of range”) occurs if the specified value is out of range.

Response

NR3

Example

```
POW:LIM:AUTO 20
```

[SOURce:]CURRent Command

Relates to the current settings.

CURR

Set the current.
This command is disabled if CC control is set to be performed via external control (CURR:EXT:SOUR).

Command

```
[SOURce:]CURRent[:LEVel][:IMMediate][:AMPLitude] <numeric>
[SOURce:]CURRent[:LEVel][:IMMediate][:AMPLitude]?
```

Parameter

Setting: 0 % to 105 % of rated output current (The default value is 105 %)
Unit: A
Settings are reset to default when the *RST command is sent.

Response

NR3

Example

```
CURR 2.5
```

CURR:EXT:SOUR

Sets whether to perform external control via CC control.

Command

```
[SOURce:]CURRent:EXTernal:SOURce <character>
[SOURce:]CURRent:EXTernal:SOURce?
```

Parameter

Set value:	NONE	Not controlled (default)
	Voltage	Controlled by external voltage
	RESistance	Controlled by external resistance

Settings are reset to default when the *RST command is sent.

Response

character

Example

```
CURR:EXT:SOUR VOLT
```

CURR:LIM:AUTO

Sets whether to limit the current setting to prevent it from exceeding the OCP trip point.
If you enable the limit when the current setting is higher than 95 % of the OCP trip point, the OCP trip point will be set to 105 % of the current setting.

Command

```
[SOURce:]CURRent:LIMit:AUTO <boolean>
[SOURce:]CURRent:LIMit:AUTO?
```

Parameter

Set value:	ON(1)	Limited (default)
	OFF(0)	The setting is not limited.

Settings are reset to default when the *RST command is sent.

Response

NR1

Example

```
CURR:LIM:AUTO ON
```

Related command

CURR:PROT
CURR:PROT:DEL

CURR:PROT

Sets the trip point for the overcurrent protection (OCP).
If you enable the current limit (CURR:LIM:AUTO ON) when the current setting is higher than 95 % of the OCP trip point, the OCP trip point setting is changed to 105 % of the voltage setting.

Command

```
[SOURce:]CURRent:PROTection[:LEVel] <numeric>
[SOURce:]CURRent:PROTection[:LEVel]?
```

Parameter

Setting: 10 % to 112 % of rated output current (The default value is 112 %)
Unit: A
An SCPI error (-222, “Data out of range”) occurs if the specified value is out of range.

Response

NR3

Example

```
CURR:PROT 48
```

Related command

OUTP:PROT:CLE
CURR:LIM:AUTO
CURR:PROT:DEL

CURR:PROT:DEL

Sets the time from overcurrent detection to OCP activation.

Command

```
[SOURce:]CURRent:PROTection:DELay <numeric>
[SOURce:]CURRent:PROTection:DELay?
```

Parameter

Value: 0.0 to 2.0 (The default value is 0)
Unit: S
An SCPI error (-222, “Data out of range”) occurs if the specified value is out of range.

Response

NR3

Example

```
CURR:PROT:DEL 1.5
```

Related command

CURR:PROT

CURR:SST:FALL

Sets the soft stop time in CC mode.
This command is valid when the startup state when the output is turned on is set to CC priority (SYST:CONF:STAR:PRI CC).

Command

```
[SOURce:]CURRent:SSTart:FALL <numeric>
[SOURce:]CURRent:SSTart:FALL?
```

Parameter

Set value:	0	Disable soft stop (default)
	0.5 to 10.0	Soft stop time

Settings are reset to default when the *RST command is sent.
Unit: S
An SCPI error (-222, “Data out of range”) occurs if the specified value is out of range.

Response

NR3

Example

```
CURR:SST:FALL 2.5
```

CURR:SST:RISE

Sets the soft start time in CC mode.
This command is valid when the startup state when the output is turned on is set to CC priority (SYST:CONF:STAR:PRI CC).

Command

```
[SOURce:]CURRent:SSTart:RISE <numeric>
[SOURce:]CURRent:SSTart:RISE?
```

Parameter

Set value:	0	Disable soft start (default)
	0.5 to 10.0	Soft start time

Settings are reset to default when the *RST command is sent.
Unit: S
An SCPI error (-222, “Data out of range”) occurs if the specified value is out of range.

Response

NR3

Example

```
CURR:SST:RISE 2.5
```

CURR:OFFT:OVER

Sets the upper limit current value at which the output-off timer function turns off the output.

Command

```
[SOURce:]CURRent:OFFTimer:OVER <numeric>
[SOURce:]CURRent:OFFTimer:OVER?
```

Parameter

Set value:	0	Upper limit value not set (default)
	0.001 to Max	Upper limit current value at which the output turns off (rated output current × 112 %)

Unit: A
An SCPI error (-222, “Data out of range”) occurs if the specified value is out of range.

Response

NR3

Example

```
CURR:OFFT:OVER 2.1
```

CURR:OFFT:UND

Sets the lower limit current value at which the output-off timer function turns off the output.

Command

```
[SOURce:]CURRent:OFFTimer:UNDer <numeric>
[SOURce:]CURRent:OFFTimer:UNDer?
```

Parameter

Set value:	0	Lower limit value not set (default)
	0.001 to Max	Lower limit current value at which the output turns off (rated output current × 112 %)

Unit: A
An SCPI error (-222, “Data out of range”) occurs if the specified value is out of range.

Response

NR3

Example

```
CURR:OFFT:UND 1
```

CURR:TRIG

Sets the current value to be changed by a trigger.
This command is disabled if CC control is set to be performed via external control (CURR:EXT:SOUR).

Command

```
[SOURce:]CURRent[:LEVel]:TRIGgered[:AMPLitude] <numeric>
[SOURce:]CURRent[:LEVel]:TRIGgered[:AMPLitude]?
```

Parameter

Setting: 0 % to 105 % of rated output current (The default value is 105 %)
Unit: A
Settings are reset to default when the *RST command is sent.
When you set CURR, the setting will change to the value of CURR.

Response

NR3

Example

```
CURR:TRIG 2.5
```

[SOURce:]VOLTage Command

Relates to the voltage settings.

VOLT

Set the voltage.
This command is disabled if CV control is set to be performed via external control (VOLT:EXT:SOUR).

Command

```
[SOURce:]VOLTage[:LEVel][:IMMediate][:AMPLitude] <numeric>
[SOURce:]VOLTage[:LEVel][:IMMediate][:AMPLitude]?
```

Parameter

Setting: 0 % to 105 % of rated output voltage (The default value is 0 %)
Unit: V
Settings are reset to default when the *RST command is sent.
An SCPI error (-222, “Data out of range”) occurs if the specified value is out of range.

Response

NR3

Example

```
VOLT 20
```

VOLT:EXT:SOUR

Sets whether to use external CV control.

Command

```
[SOURce:]VOLTage:EXTernal:SOURce <character>
[SOURce:]VOLTage:EXTernal:SOURce?
```

Parameter

Set value:	NONE	Not controlled (default)
	VOLTage	Controlled by external voltage
	RESistance	Controlled by external resistance

Settings are reset to default when the *RST command is sent.

Response

character

Example

```
VOLT:EXT:SOUR VOLT
```

VOLT:LIM:AUTO

Sets whether to limit the voltage setting to prevent it from exceeding the OVP trip point.
If you enable the limit when the voltage setting is higher than 95 % of the OVP trip point, the OVP trip point will be set to 105 % of the voltage setting.

Command

```
[SOURce:]VOLTage:LIMit:AUTO <boolean>
[SOURce:]VOLTage:LIMit:AUTO?
```

Parameter

Set value:	ON(1)	Limited (default)
	OFF(0)	The setting is not limited.

Settings are reset to default when the *RST command is sent.

Response

NR1

Example

```
VOLT:LIM:AUTO ON
```

Related command

VOLT:PROT

VOLT:PROT

Sets the trip point for the overvoltage protection (OVP).
If you enable the voltage limit is on (VOLT:LIM:AUTO ON) when the voltage setting ishigher than 95 % of the OVP trip point, the OVP trip point setting is changed to 105 % of the voltage setting.

Command

```
[SOURce:]VOLTage:PROTection[:LEVel] <numeric>
[SOURce:]VOLTage:PROTection[:LEVel]?
```

Parameter

Setting: 10 % to 112 % of rated output voltage (The default value is 112 %)
Unit: V
Settings are reset to default when the *RST command is sent.
An SCPI error (-222, “Data out of range”) occurs if the specified value is out of range.

Response

NR3

Example

```
VOLT:PROT 48
```

Related command

OUTP:PROT:CLE
VOLT:LIM:AUTO

VOLT:SST:FALL

Sets the soft stop time in CV mode.
This command is invalid when the startup state when the output is turned on is set to CC priority (SYST:CONF:STAR:PRI CC).

Command

```
[SOURce:]VOLTage:SSTart:FALL <numeric>
[SOURce:]VOLTage:SSTart:FALL?
```

Parameter

Set value:	0	Disable soft stop (default)
	0.5 to 10.0	Soft stop time

Settings are reset to default when the *RST command is sent.
Unit: S
An SCPI error (-222, “Data out of range”) occurs if the specified value is out of range.

Response

NR3

Example

```
VOLT:SST:FALL 2.5
```

VOLT:SST:RISE

Sets the soft start time in CV mode.
This command is invalid when the startup state when the output is turned on is set to CC priority (SYST:CONF:STAR:PRI CC).

Command

```
[SOURce:]VOLTage:SSTart:RISE <numeric>
[SOURce:]VOLTage:SSTart:RISE?
```

Parameter

Set value:	0	Disable soft start (default)
	0.5 to 10.0	Soft start time

Settings are reset to default when the *RST command is sent.
Unit: S
An SCPI error (-222, “Data out of range”) occurs if the specified value is out of range.

Response

NR3

Example

```
VOLT:SST:RISE 2.5
```

VOLT:OFFT:OVER

Sets the upper limit voltage value at which the output-off timer function turns off the output.

Command

```
[SOURce:]VOLTage:OFFTimer:OVER <numeric>
[SOURce:]VOLTage:OFFTimer:OVER?
```

Parameter

- PMX18-2E, PMX18-5E, PMX35-1E, PMX35-3E, PMX70-1E

Set value:	0	Upper limit value not set (default)
	0.01 to Max	Upper limit current/voltage value at which the output turns off (0.01 to rated output voltage × 112 %)

- PMX110-0.6E, PMX250-0.25E, PMX350-0.2E, PMX500-0.1E

Set value:	0	Upper limit value not set (default)
	0.1 to MAX	Upper limit current/voltage value at which the output turns off (0.1 to rated output voltage × 112 %)

Unit: V

An SCPI error (-222, “Data out of range”) occurs if the specified value is out of range.

Response

NR3

Example

```
VOLT:OFFT:OVER 2.1
```

VOLT:OFFT:UND

Sets the lower limit voltage value at which the output-off timer function turns off the output.

Command

```
[SOURce:]VOLTage:OFFTimer:UNDer <numeric>
[SOURce:]VOLTage:OFFTimer:UNDer?
```

Parameter

- PMX18-2E, PMX18-5E, PMX35-1E, PMX35-3E, PMX70-1E

Set value:	0	Lower limit value not set (default)
	0.01 to MAX	Lower limit voltage value at which the output turns off (0.01 to rated output voltagex112 %)

- PMX110-0.6E, PMX250-0.25E, PMX350-0.2E, PMX500-0.1E

Set value:	0	Lower limit value not set (default)
	0.1 to MAX	Lower limit voltage value at which the output turns off (0.1 to rated output voltage x112 %)

Unit: V
An SCPI error (-222, “Data out of range”) occurs if the specified value is out of range.

Response

NR3

Example

```
VOLT:OFFT:UND 1
```

VOLT:TRIG

Sets the voltage value to be changed by a trigger.
This command is disabled if CV control is set to be performed via external control (VOLT:EXT:SOUR).

Command

```
[SOURce:]VOLTage[:LEVel]:TRIGgered[:AMPLitude] <numeric>
[SOURce:]VOLTage[:LEVel]:TRIGgered[:AMPLitude]?
```

Parameter

Setting: 0 % to 105 % of rated output current (The default value is 0 %)
Unit: V
Settings are reset to default when the *RST command is sent.
When you send the VOLT command, the setting is changed to the VOLT value.

Response

NR3

Example

```
VOLT:TRIG 120
```

STATus Command

Relate to the operating status of the PMX-E series .

Status Report Structure

A “+” represents the logical OR of the register bits.

1999 SCPI Syntax & Style

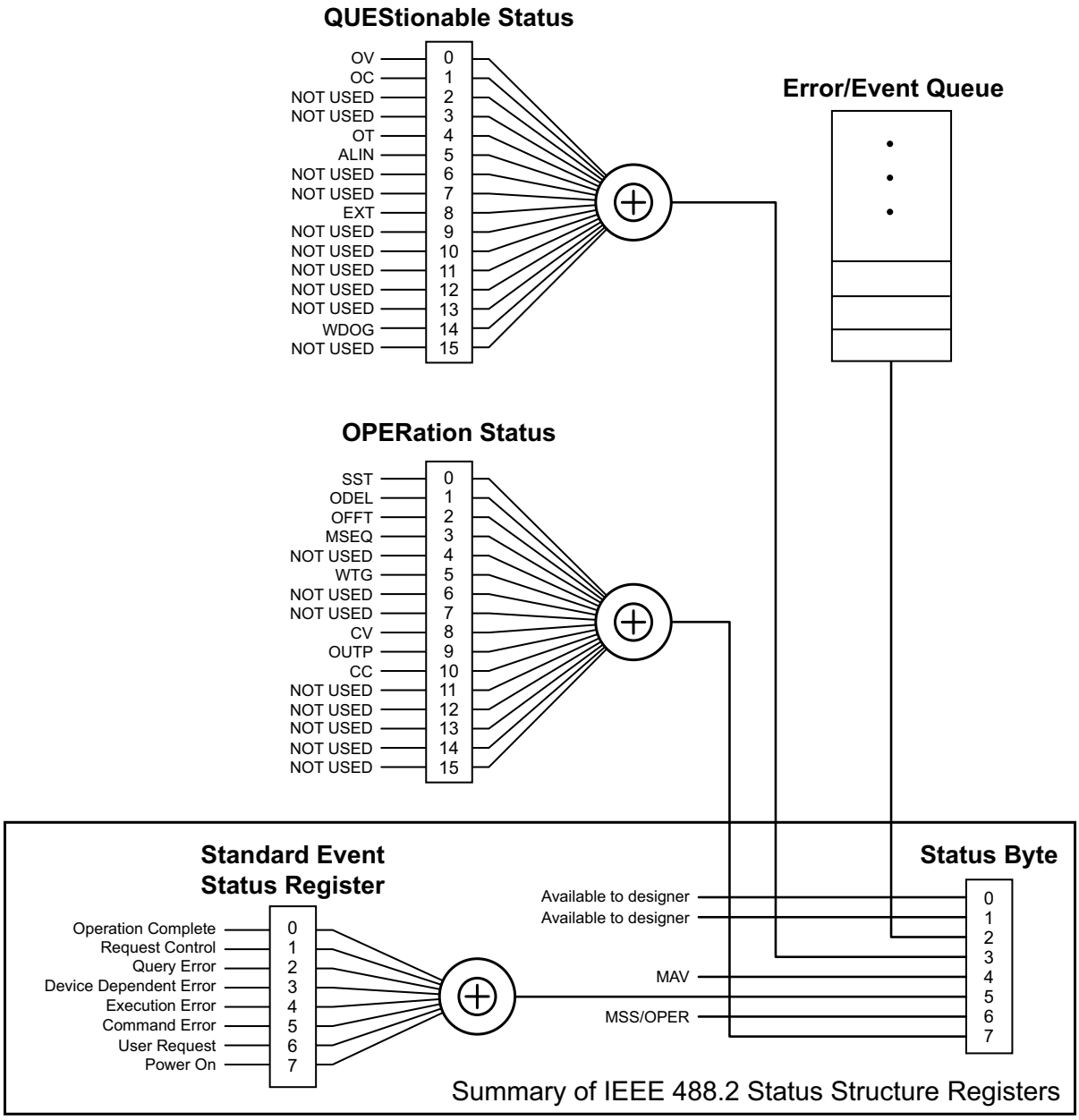

Summary of IEEE 488.2 Status Structure Registers

Standard architecture

IEEE 488.2 and SCPI registers are used for status reports.

In each SCPI status register, there are the following sub registers: the CONDition register, the EVENt register, the ENABle register, the PTRansition filter, and the NTRansition filter.

See the tutorial“Status Monitoring” *(p.84)*.

CONDition register

Transitions of the CONDition register are automatic and apply the condition of the PMX-E series in real-time. Reading this register does not affect its contents.

EVENt register

The EVENt register bits are automatically set according to the changes in the CONDition register. The rule for setting the bits varies depending on the positive and negative transition registers (PTRansition and NTRansition). The EVENt register is reset when it is read.

ENABle register

The ENABle register enables reports to the summary bit or status bit of the event bits.

Transition filters

Use the PTRansition (positive transition) filter to report events when the condition changes from false to true.

Use the NTRansition (negative transition) filter to report events when the condition changes from true to false.

If both the positive filter and negative filter are set to true, events can be reported each time the status changes. If both filters are cleared, event reporting is disabled.

Status byte register

The status byte register stores STB and RQS (MSS) messages as defined by the IEEE 488.1 standard. The status byte register can be read by using IEEE 488.1 serial polling or the IEEE 488.2 common command *STB?.

When the controller executes serial polling, bit 6 responds with request service (RQS). The status byte value is not changed by serial polling.

*STB? makes the device send the content of the status byte register and the Master Status Summary (MSS) message.*STB? does not change the status byte, MSS, or RQS.

Bit	Bit weight	Bit name	Description
0	1	Reserved	Reserved for future use by IEEE 488. The bit value is notified as zero.
1	2	Reserved	
2	4	Error/Event Queue	If data exists in the error or event queue, this bit is set to true.
3	8	Questionable Status Register (QUES)	This bit is set to true when a bit is set in the QUEStionable event status register and the corresponding bit in the QUEStionable status enable register is true.
4	16	Message Available (MAV)	This bit is set to true when a request is received from the digital programming interface and this product is ready to generate the data byte.
5	32	Standard Event Status Bit Summary (ESB)	This bit is set to true when a bit is set in the event status register.
6	64	Request Service (RQS)	This bit is set to true when a bit is set in the service request enable register and the corresponding bit exists in the status byte.
		Master Status Summary (MSS)	This bit is set when any bit in the status byte register is set to 1, and the corresponding bit in the service request enable register is set to 1.
7	128	Operation Status Register (OPER)	This bit is set to true when a bit is set in the OPERation event status register and the corresponding bit in the OPERation status enable register is set.
8 to 15	–	Not Used	Not used

Event status register

The event status register bits are set when certain events occur during PMX-E series operation. All the event status register bits are set by the error event queue.

This register is defined by the IEEE 488.2 standard and is controlled using the IEEE 488.2 common commands *ESE, *ESE?, and *ESR?.

You can check the error content with SYST:ERR?.

Bit	Bit weight	Bit name	Description	Error number
0	1	Operation Complete (OPC)	Set when an *OPC command is received and all operations in standby have been completed.	-800 to -899
1	2	Request Control (RQC)	Not used	—
2	4	Query Error (QYE)	Set when an attempt is made to read data from the output queue when there is no data or when the output queue is not in the wait state. This indicates that there is no data in the output queue.	-400 to -499
3	8	Device Dependent Error (DDE)	Set when there is a device-specific error.	-300 to -399 100 to 999
4	16	Execution Error (EXE)	Set when the PMX-E series evaluates that the program data after the header is outside the formal input range or does not match the specifications of the PMX-E series. Indicates that a valid SCPI command may not be executed correctly depending on the state of the PMX-E series.	-200 to 299
5	32	Command Error (CME)	Set when an IEEE 488.2 syntax error is detected by the parser, when an unidentifiable header is received, or when a group execution trigger enters the internal IEEE 488.2 SCPI command input buffer.	-100 to -199
6	64	User Request (URQ)	Not used	—
7	128	Power On (PON)	Set when the power is turned on.	—
8 to 15	—	Reserved	Not used	—

OPERation status register

The OPERation status register is a 16-bit register that contains information about the normal operating conditions.

Bit	Bit weight	Bit name	Description
0	1	Soft Start (SST)	Indicates whether a soft start or soft stop is in use.
1	2	OUTPut DELAY (ODEL)	Indicates whether the output-on/off delay is active.
2	4	OUTPut OFF TIMer (OFFT)	The output-off timer is active.
3	8	MEMory SEQuence (MSEQ)	The memory sequence is active.
4	16	NOT USED	Not used
5	32	wating for trigger (WTG)	Indicates whether the device is waiting for a trigger (TRIG) after sending INIT.
6	64	NOT USED	Not used
7	128	NOT USED	Not used
8	256	CV	CV output
9	512	OUTPut	Output on
10	1024	CC	CC output
11	2048	NOT USED	Not used
12	4096	NOT USED	Not used
13	8192	NOT USED	Not used
14	16384	NOT USED	Not used
15	32768	NOT USED	Always 0.

STAT:OPER?

Queries the event of the OPERation status register.
A query clears the contents of the register.

Command

```
STATus:OPERation[:EVENt]?
```

Response

NR1

STAT:OPER:COND?

Queries the condition of the OPERation status register.

Command

```
STATus:OPERation:CONDition?
```

Response

NR1

STAT:OPER:ENAB

Sets the enable register of the OPERation status register.

Command

```
STATus:OPERation:ENABle <NRf>
STATus:OPERation:ENABle?
```

Parameter

Set value: 0 to 65535

Response

NR1

STAT:OPER:NTR

Sets the negative transition filter of the OPERation status register.

Command

```
STATus:OPERation:NTRansition <NRf>
STATus:OPERation:NTRansition?
```

Parameter

Set value: 0 to 65535

Response

NR1

STAT:OPER:PTR

Sets the positive transition filter of the OPERation status register.

Command

```
STATus:OPERation:PTRansition <NRf>
STATus:OPERation:PTRansition?
```

Parameter

Set value: 0 to 65535

Response

NR1

QUEStionable status register

A 16-bit register that stores information about questionable events and status during operation of the PMX-E series. The QUEStionable status register bits may indicate that there are problems with the measured data.

Bit	Bit weight	Bit name	Description
0	1	OVP (OV)	Overvoltage protection activated
1	2	OCP (OC)	Overcurrent protection activated
2	4	NOT USED	Not used
3	8	NOT USED	Not used
4	16	Over Temperature Protection (OT)	Overheat protection activated
5	32	ALarm IN executed (ALIN)	ALarm IN is active.
6	64	NOT USED	Not used
7	128	NOT USED	Not used
8	256	EXTernal analog control fail	An external control error is active.
9	512	NOT USED	Not used
10	1024	NOT USED	Not used
11	2048	NOT USED	Not used
12	4096	NOT USED	Not used
13	8192	NOT USED	Not used
14	16384	WatchDOG protection (WDOG)	Communication monitoring activated
15	32768	NOT USED	Always 0.

STAT:QUES?

Queries the event of the QUEStionable status register.
A query clears the contents of the register.

Command

```
STATus:QUEStionable[:EVENt]?
```

Response

NR1

STAT:QUES:COND?

Queries the condition of the QUEStionable status register.

Command

```
:STATus:QUEStionable:CONDition?
```

Response

NR1

STAT:QUES:ENAB

Sets the enable register of the QUEStionable status register.

Command

```
STATus:QUEStionable:ENABle <NRf>
STATus:QUEStionable:ENABle?
```

Parameter

Set value: 0 to 65535

Response

NR1

STAT:QUES:NTR

Sets the negative transition filter of the QUEStionable status register.

Command

```
STATus:QUEStionable:NTRansition <NRf>
STATus:QUEStionable:NTRansition?
```

Parameter

Set value: 0 to 65535

Response

NR1

STAT:QUES:PTR

Sets the positive transition filter of the QUEStionable status register.

Command

```
STATus:QUEStionable:PTRansition <NRf>
STATus:QUEStionable:PTRansition?
```

Parameter

Set value: 0 to 65535

Response

NR1

Preset status

STAT:PRES

Resets the ENABle, PTRansition, and NTRansition filter registers of all status registers (including sub registers) to their default values.

Default settings

ENABle：0x0000

PTRansition：0x7FFF

NTRansition：0x0000

Command

```
STATus:PRESet
```

SYSTem Command

Relates to system settings.

SYST:COMM:RLST

Sets the operating mode to local or remote.

Command

```
SYSTem:COMMunicate:RLSTate <character>
SYSTem:COMMunicate:RLSTate?
```

Parameter

Set value:	LOCal	Sets the product to local mode (Remote Disable; the RMT turns off). This enables both panel operations and commands. This is a substitute command for IEEE488.1 ren FALSE (Remote Disable). If the communication monitoring timer is set, set the timer to off (OUTP:PROT:WDOG 0) before switching to local mode.
	REMote	Sets the PMX-E to remote mode; All panel keys, except the LOCAL key, are locked. This is a substitute command for IEEE 488.1 ren (Remote Enable). This is also the substitute command for address specification.
	RWLock	Sets the PMX-E to remote mode; All panel keys (including the LOCAL key) are locked. This is a substitute command for IEEE 488.1 llo (Local Lock Out).

Response

character

Example

```
SYST:COMM:RLST REM
```

SYST:CONF:BLE

Sets the bleeder circuit operation.

Command

```
SYSTem:CONFigure:BLEeder <boolean>
SYSTem:CONFigure:BLEeder?
```

Parameter

Set value:	ON(1)	Bleeder on (default)
	OFF(0)	The bleeder circuit is turned off.

Response

NR1

Example

```
SYST:CONF:BLE ON
```

SYST:CONF:STAR:PRI

Sets the prioritized operation mode when the output is turned on.

Command

```
SYSTem:CONFigure:STARtup:PRIority <character>
SYSTem:CONFigure:STARtup:PRIority?
```

Parameter

Set value:	CC	CC (constant current) is prioritized.
	CV	CV (constant voltage) is prioritized.

Response

character

Example

```
SYST:CONF:STAR:PRI CC
```

SYST:ERR?

Reads the oldest error information or event information from the error queue.
The error/event queue can hold up to 16 errors. The error queue is cleared if a *CLS command is sent.
See the tutorial “Error Checking” *(p.86)*.

Command

```
SYSTem:ERRor[:NEXT]?
```

Response

Returns the oldest error or event from the error/event queue.

Response example:

Example: If there is no error or event

```
+0,"No error"
```

Example: If a command that cannot be executed in the present operating status is received

```
-221, “Settings conflict”
```

SYST:ERR:COUN?

Reads the number of unread errors in the error queue.

Command

```
SYSTem:ERRor:COUNt?
```

Response

NR1

SYST:ERR:TRAC

Executes a debug trace and sets whether communication errors are displayed or not.
If the communication error display is enabled, error numbers, such as Err-100, are shown in the display area.
A communication error will appear if the PMX-E series is set to remote.

Command

```
SYSTem:ERRor:TRACe <boolean>
SYSTem:ERRor:TRACe?
```

Parameter

Set value:	ON (1)	Communication errors are displayed.
	OFF (0)	Communication errors are not displayed. (this is the default value)

Response

NR1

Example

```
SYST:ERR:TRAC ON
```

SYST:EXT:STAT:CC:POL

Sets the polarity of the status output signal for constant-current mode.

Command

```
SYSTem:EXTernal:STATus:CC:POLarity <character>
SYSTem:EXTernal:STATus:CC:POLarity?
```

Parameter

Set value:	POSitive	High in CC mode
	NEGative	Low in CC mode (default)

Response

character

Example

```
SYST:EXT:STAT:CC:POL NEG
```

SYST:EXT:STAT:CV:POL

Sets the polarity of the status output signal for constant-voltage mode.

Command

```
SYSTem:EXTernal:STATus:CV:POLarity <character>
SYSTem:EXTernal:STATus:CV:POLarity?
```

Parameter

Set value:	POSitive	High in CV mode
	NEGative	Low in CV mode (default)

Response

character

Example

```
SYST:EXT:STAT:CV:POL NEG
```

SYST:EXT:STAT:OUTP:POL

Sets the polarity of the status output signal for output on.

Command

```
SYSTem:EXTernal:STATus:OUTP:POLarity <character>
SYSTem:EXTernal:STATus:OUTP:POLarity?
```

Parameter

Set value:	POSitive	High when the output is on
	NEGative	Low during output on (default)

Response

character

Example

```
SYST:EXT:STAT:OUTP:POL NEG
```

SYST:EXT:STAT:PROT:POL

Sets the polarity of the status output signal for protection operation.

Command

```
SYSTem:EXTernal:STATus:PROTection:POLarity <character>
SYSTem:EXTernal:STATus:PROTection:POLarity?
```

Parameter

Set value:	POSitive	High when a protection is activated
	NEGative	Low when protection is active (default)

Response

character

Example

```
SYST:EXT:STAT:PROT:POL NEG
```

SYST:KLOC

Locks or releases panel operations (key lock).

Command

```
SYSTem:KLOCk <boolean>
SYSTem:KLOCk?
```

Parameter

Set value:	ON (1)	Key lock
	OFF (0)	Release key lock

Response

NR1

Example

```
SYST:KLOC ON
```

SYST:KLOC:MODE

Sets the key lock mode.

Command

```
SYSTem:KLOCk:MODE {0|1|2}
SYSTem:KLOCk:MODE?
```

Parameter

Set value:	0	Key lock 1 (Loc1) Locks all keys other than OUTPUT and the memory (PRESET A/B/C) recall keys, as well as the rotary knob operation.
	1	Key lock 2 (Loc2) Locks all keys and rotary knobs except for the OUTPUT key
	2	Key lock 3 (Loc3) (default) Locks all keys and the rotary knob.

Response

NR1

Example

```
SYST:KLOC:MODE 1
```

SYST:LOC/ SYST:REM/ SYST:RWL

This is an old style command.
When creating a new program, use SYST:COMM:RLST.

Command

```
SYSTem:LOCal
SYSTem:REMote
SYSTem:RWLock
```

SYST:VERS?

Queries the version of the SCPI specifications that the PMX-E series complies with.

Command

```
SYSTem:VERSion?
```

Response

Returns 1999.0.

TRIGger Command

Relates to trigger.

TRIG:TRAN

Executes a software trigger on the TRANsient trigger subsystem.

Command

```
TRIGger:TRANsient[:IMMediate]
```

TRIG:TRAN:SOUR

Sets the condition (trigger source) for actually changing the settings after the TRANsient trigger subsystem receives an INIT:TRAN.

Command

```
TRIGger:TRANsient:SOURce <character>
TRIGger:TRANsient:SOURce?
```

Parameter

Set value:	IMMediate	Change the settings immediately (this is the default value)
	BUS	Change the settings when a software trigger (*TRG, TRIG:TRAN, IEEE488.1 get (Group Execute Trigger) is received

Settings are reset to default when the *RST command is sent.

Response

character

Example

```
TRIG:TRAN:SOUR BUS
```

Tutorial

Setup and measurement

Setting the output

To set the output voltage and current, use the VOLTage and CURRent commands, respectively. To set the output on/off, use the OUTPut command.

```
VOLTage 10      'Sets the voltage to 10 V
CURRent 5       'Set the current to 5 A
OUTPut ON       'Turns the output on
```

Setting the maximum and minimum values

To set the maximum current value, specify 105 % of the rated output current with the CURRent command. If you specify MAXimum, you can set the maximum current value even without knowing the specific current value.

```
CURRent MAXimum 'Sets the current to the maximum value.
```

To set the maximum voltage value, specify 105% of the rated output voltage with the VOLTage command. If you specify MAXimum, you can set the maximum voltage value even without knowing the specific voltage value.

```
VOLTage MAXimum 'Sets the voltage to the maximum value.
```

To check the specific maximum value, specify MAXimum in the VOLTage? query or CURRent? query.

```
VOLTage? MAXimum
```

<Reading the response>

```
CURRent? MAXimum
```

<Reading the response>

The values returned by the above queries may vary depending on the VOLT:PROT (OVP) and CURR:PROT (OCP) settings.

Setting and clearing OVP/OCP

Overvoltage protection (OVP) and overcurrent protection (OCP) can be set via commands.
To set OVP and OCP, use the VOLT:PROT and CURR:PROT.

```
VOLTage:PROTection 15 'Sets OVP to 15 V.
CURRent:PROTection 4.5 'Sets OCP to 4.5 A.
```

To set the OVP and OCP trip points to the maximum values, specify MAXimum in the VOLT:PROT and CURR:PROT commands, respectively.
To set the OVP and OCP trip points to the minimum values, specify MINimum in the VOLT:PROT and CURR:PROT commands, respectively.

```
VOLTage:PROTection MAXimum 'Sets OVP to the maximum value.
CURRent:PROTection MINimum 'Sets OCP to the minimum value.
```

When OVP or OCP activates, the output turns off.
Eliminate the cause of the alarm, and clear the alarm.

```
OUTPut:PROTection:CLEar
```

Measurement

After setting the output and OVP/OCP, measure the output values.
To measure the output voltage and current, use the following queries.

```
MEASure:VOLTage? Queries the 'output voltage.
MEASure:CURRent? Queries the 'output current.
```

Measured values are updated every 200 ms. If you query the measured value at an interval shorter than 200 ms, the previous one will return.

Changing settings by trigger (TRANsient)

You can use triggers to synchronize the setting of the voltage and current. This is useful when synchronizing the output change with the operation of a remotely controllable external device. To reserve settings that will be changed by triggers, use the VOLT:TRIG and CURR:TRIG commands.

```
VOLTage 12.0        'Sets the voltage to 12.0 V
CURRent 1.5         'Set the current to 1.5 A
VOLTage:TRIGgered 13.5  'Sets the voltage to 13.5 V by trigger.
CURRent:TRIGgered 2.5 'Sets the current to 2.5 A by trigger.
TRIGger:TRANsient:SOURce BUS  'Sets the trigger source to BUS.
INITiate:TRANsient  'Starts the trigger function.
TRIGger:TRANsient  'Provides a software trigger.
```

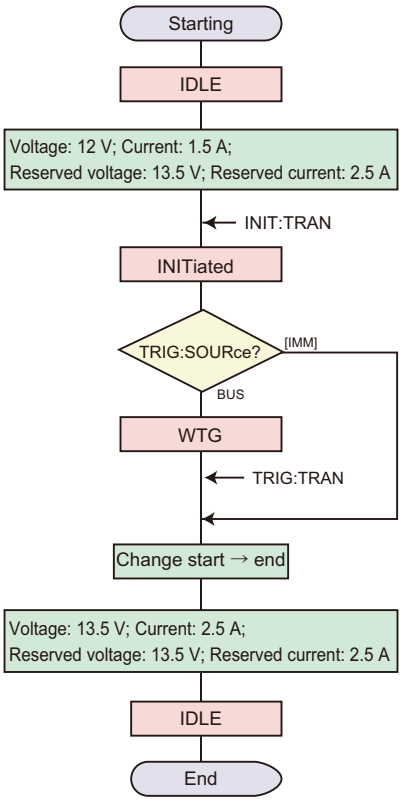

Use the TRIG:TRAN:SOUR command to set the trigger source to BUS or IMMediate.

INIT:TRAN causes the TRIGger subsystem to exit the IDLE state and initiate the trigger function. If the trigger source is set to IMMediate, the voltage/current will change to the new setting immediately. If the trigger source is set to BUS, the TRANsient subsystem enters the WTG (Waiting For Trigger) state.

If the trigger source is set to BUS and the TRIGger subsystem is in a WTG state, when a software trigger is received, a change is executed.

TRIGger:TRANsient provides a software trigger for the TRANsient subsystem only.

The *TRG command or the IEEE488.1 get (Group Execute Trigger) command applies a software trigger to all trigger subsystems, if there are other trigger subsystems in the initiated state, their trigger functions will also be executed at the same time.

Once the operation is complete, the TRANsient subsystem returns to the IDLE state. If an ABORt or equivalent command is sent without executing a trigger, the TRANsient subsystem returns to the IDLE state. When you turn on the POWER switch, all the TRIGger subsystems are in the IDLE state.

In IDLE state, the TRIGger subsystem ignores all triggers. If you send one of the following commands, the TRIGger subsystem is switched to the IDLE state, regardless of its current state.

`ABORt`

`*RST`

Device clear (USB interface) or break signal (RS232 interface)

Behavior when using triggers

When an ABOR command is received, INIT:TRAN is cancelled. The setting value changed by the trigger will not change.

The following table shows the responses when the voltage is set to 20 V (VOLT 20) and the voltage set by the trigger is 10 V (VOLT:TRIG 10).

	Response	
	VOLT?	VOLT:TRIG?
Immediately after the command is set	20 V	10 V
After the trigger is sent	10 V	10 V
*After a *RST is sent	0 V	0 V
Voltage change VOLT 30 sent before the trigger is sent	30 V	30 V (cancel)

Status Monitoring

The status report uses two mandatory SCPI standard registers, STATus:OPERation and STATus:QUEStionable, in addition to the IEEE488.2 standard registers.

Register basics

All SCPI registers have a standard architecture that uses events/filters. CONDition, EVENt, and ENABle and optionally PTRansition and NTRansition can be used. CONDition and EVENt are read-only registers working as status indicators. ENABle, PTRansition and NTRansition are read-write registers working as event and summary filters.

STATus:OPERation register

The OPERation Status register is used to record events and notifications that occur during normal operations.
For example, to check whether CV mode output is being performed, check the CV bit (bit 8) of the STATus:OPERation register.

```
STATus:OPERation? 'Checks whether the CV bit is set.
```

STATus:QUEStionable register

The QUEStionable Status register is used to record events and notifications that occur during abnormal operations.
For example, to check whether OVP is active, check the OV bit (bit 0) in the STATus:QUEStionable register.

```
STATus:QUEStionable? 'Checks whether the OV bit is set.
```

PON (Power ON) bit

The PON bit of the event status (bit 7) in the register is set whenever the POWER switch is turned on. To generate a power-on SRQ to track power failures and power supply line errors, use PON as follows.

1 **Set *PSC (Power-on Status Clear) to 0 (or OFF).**
Enable the backup functions for event status enable register and service request enable register settings (*PSC 0).

2 **Set the PON bit (bit 7) of the event status enable register.**
Allowing the power-on event to be transmitted to the upper layer (*ESE 128).

3 **Set the ESB bit (bit 5) of the status byte enable register.**
Allowing SRQ to be generated by standard events (*SRE 32).

When you use the RS232C interface, the PON bit cannot be assigned to a service request because SRQs are not generated.
When you use the USB or LAN (VXI-11/HiSLIP) interface, even though the SRQ function itself is supported by the communication protocol, a connection lost error occurs in the VISA I/O session immediately before the power-on event. It appears that handling PON events would be difficult.

Error Checking

Error/event queue

The SCPI specifications define a standard error reporting scheme, Error/Event Queue. This is a FIFO (First In First Out) queue, which records errors and events. The maximum number of recordable errors/events is 16. Each error/event can be checked with the SYST:ERR? query.

```
SYSTem:ERRor?
```

The response to this query contains a numeric part (error/event number) and a textual description, such as:

```
-222, "Data out of range"
```

The error/event queue is emptied when the *CLS common command is sent, the last item in the queue is read, or the POWER switch is turned on. When the error/event queue is empty, the query returns the following:

```
0, "No error"
```

Displaying communication errors

The debug trace function allows you to view the oldest item in the error/event queue (if it includes an error(s) and/or event(s)). This is convenient for debugging remote control. When an error or event item is displayed on the panel, the normal voltmeter and ammeter are void.

If the error/event queue is empty, the debug trace function displays no communication errors.The communication error message disappears by sending the *CLS command. In local mode, the debug trace function is temporarily disabled. Use the SYST:ERR:TRAC command to enable or disable the communication error display.

```
SYSTem:ERRor:TRACe {ON|OFF}
```

Visual Basic 2022

Configuring a project

First, add the communication middleware (VISA library) to the project.

Click References on the Project menu to open the Reference Manager window.

On the navigation pane, click COM and then Type Libraries.

From the list in the center of the window, select “VISA COM *.* Type Library” (where *.* is the VISA library version number), and select the check box.

Click OK to close the dialog box.

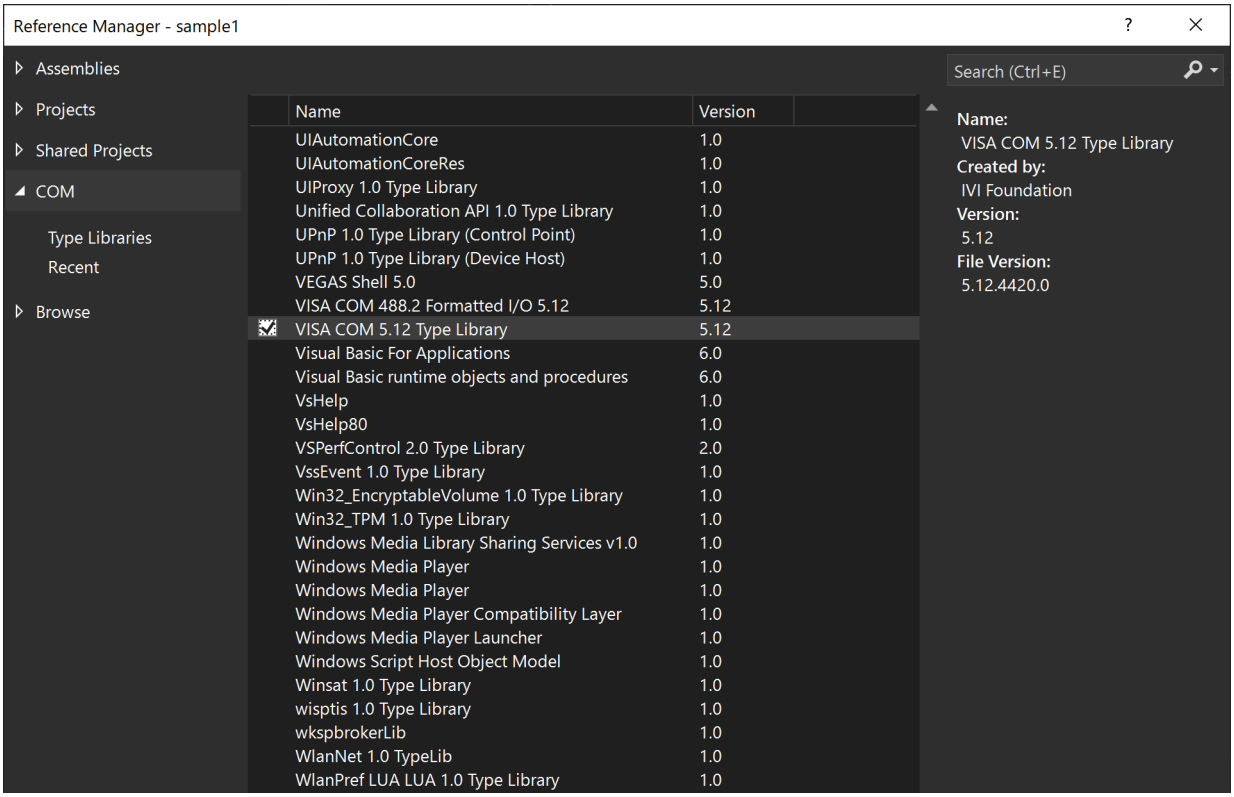

Communicating via RS232C, USB, LAN

Opening VISA

Before you can use the VISA library to communicate with RS232C, USB, and LAN devices, you must open the VISA. Specify an I/O resource to open VISA.

Example: Opening VISA before using USB with PMX-E series

```
Set rm = CreateObject("VISA.GlobalRM")
Set msg = rm.Open("USB::0x0B3E::0x105E::00000001::INSTR", NO_LOCK, 0, "")
```

“USB::0x0B3E::0x105E::00000001::INSTR” is an I/O resource.

The syntax for I/O resources is as below.The parts in square brackets ([ ]) can be omitted. Enter the appropriate values in the parts written in italics.

Serial (RS232C)		ASRL[board][::INSTR] Example: A measuring instrument connected to serial port COM1 ASRL1::INSTR
USB		USB[board]::VendorID::ProductID::SerialNumber[::InterfaceNumber] [::INSTR] Example: A USBTMC instrument with vendor ID (VID) 2878, product ID (PID) 4190, and serial number "00000001" USB0::0x0B3E::0x105E::00000001::INSTR
LAN[1]	VXI-11	TCPIP[board]::hostname[::inst0][::INSTR] Example: Measuring instrument whose IP address (hostname) is 169.254.7.8 TCPIP::169.254.7.8::INSTR You can also specify the host name for the hostname parameter.
	HiSLIP	TCPIP[board]::hostname::hislip0[::INSTR] Example: Measuring instrument whose IP address (hostname) is 169.254.7.8 TCPIP::169.254.7.8::hislip0::INSTR You can also specify the host name for the hostname parameter.
	SCPI-RAW	TCPIP[board]::hostname::portno::SOCKET Example: Measuring instrument whose IP address (hostname) is 169.254.7.8 (port number is fixed to 5025) TCPIP::169.254.7.8::5025::SOCKET You can also specify the host name for the hostname parameter.

1. The hostname must be a valid mDNS hostname (a Bonjour hostname that ends in ".local") or a DNS hostname that is managed by an external DNS server (a full-qualified domain name—FQDN). If you are using an mDNS hostname, Apple Bonjour (alternatively, iTunes or Safari) must be installed on your PC.

In VISA, you can use aliases for I/O resources.

If you use an alias for an I/O resource, even if the alias name is hard-coded in the application, the I/O resource name can still be changed to an appropriate value when the application runs.

Example: Using an alias (MYDEV1) for an I/O resource

```
Set msg = rm.Open("MYDEV1", NO_LOCK, 0, "")
```

When you use aliases, specify the actual I/O resources through an external configuration table or similar tool. Refer to the VISA manual.

Controlling the instrument

Next, we will use commands such as read and write commands to control the instrument. You must include line-feed codes in the command strings.

Example:

```
msg.WriteString ("VOLT 10" & vbLF)      'Set the voltage to 10 V
msg.WriteString ("OUTP 1" & vbLF)     'Turns the output on
```

Closing VISA

Finally, close VISA.

In a sequence of operations, you only have to open and close VISA once.

```
msg.Close
```

Appendix

List of Errors

Standard SCPI errors

Command error

An error in the range [-199, -100] indicates that an IEEE 488.2 syntax error has been detected by the instrument's parser. The occurrence of any error in this class causes the Command Error bit (bit 5) in the event status register to be set.

Error code		Error message description
-101	Invalid character	An invalid character exists. A data element different than those allowed was recognized.
-102	Syntax error	Syntax error. An unrecognized command or data type was encountered.
-103	Invalid separator	Invalid separator. The parser was expecting a separator and encountered an illegal character.
-108	Parameter not allowed	Parameter is not allowed. More parameters were received than expected for the header.
-109	Missing parameter	Missing parameter. Fewer parameters were received than required for the header.
-110	Command header error	Command header error. An error was detected in the header.
-112	Program mnemonic too long	Mnemonic too long. The number of characters in the command header exceeds 12 characters.
-113	Undefined header	Undefined header. The header is inappropriate for PMX-E Series.
-114	Header suffix out of range	Invalid suffix exists in the header.
-115	Unexpected number of parameters	Unexpected parameters were received in the header.
-120	Numeric data error	Numeric data error. Generated when parsing a data element which appears to be numeric, including the nondecimal numeric types.
-128	Numeric data not allowed	Numeric data is not allowed.
-131	Invalid suffix	A suffix is invalid. The suffix does not follow the syntax or is inappropriate for the PMX-E series.
-138	Suffix not allowed	A suffix was encountered after a numeric parameter that does not allow suffixes.
-140	Character data error	Character data error. Generated when parsing a character data element.
-141	Invalid character data	Invalid character data.
-144	Character data too long	Character data too long. The character data element contains too many characters.
-150	String data error	String data error. Generated when parsing a string data element.
-151	Invalid string data	Invalid string data.
-158	String data not allowed	String data is not allowed.

Execution error

An error in the range [-299, -200] indicates that an error has been detected by the instrument's execution control block. The occurrence of any error in this class causes the Execution Error bit (bit 4) in the event status register to be set.

Error code		Error message description
-211	Trigger ignored	A trigger was received but ignored.
-213	Init ignored	A measurement initiate operation was ignored because measurement is in progress.
-214	Trigger deadlock	A deadlock occurred because a query was received before the software trigger.
-220	Parameter error	Invalid parameter.
-221	Settings conflict	A command was received that cannot be executed in the current operating status.
-222	Data out of range	Parameter was out of range.
-224	Illegal parameter value	Received invalid parameter data.
-230	Data corrupt or stale	Received a data query before the measurement completed.
-241	Hardware missing	Cannot be executed because the optional hardware is not installed.

Device-specific errors

An error in the range [-399, -300] indicates that an error other than command error, query error, or execution error was detected. The occurrence of any error in this class causes the Device Dependent Error bit (bit 3) in the event status register to be set.

Error code		Error message description
-310	System error	System error.
-311	Memory error	Memory error. Physical damage to the device memory.
-313	Calibration memory lost	Calibration memory lost.Damage to nonvolatile calibration data by *CAL?.
-314	Save/recall memory lost	Memory data lost.Damage to nonvolatile data by *SAV?.
-315	Configuration memory lost	Configuration data lost. Damage to nonvolatile panel settings. An error occurred because the device was restarted after resetting to the factory default settings, but this is not abnormal.
-330	Self-test failed	An error occurred during the self-test.
-350	Queue overflow	Queue overflow.
-363	Input buffer overrun	Buffer overflow error. This is an error when using RS232C.

Query error

An error in the range [-499, -400] indicates that the output queue control of the instrument has detected a problem with the message exchange protocol described in IEEE 488.2, chapter 6. The occurrence of any error in this class causes the Query Error bit (bit 2) in the event status register to be set.

Error code		Error message description
-400	Query error (generic)	Query error. Generic error.
-410	Query INTERRUPTED	Received a new command after the query was received and before the response was read.
-420	Query UNTERMINATED	The controller attempted to read the response when the device received an unsupported query or did not receive any query.Both the "-100 COMMAND ERROR" and this error are stored in the error queue. The controller will time out.
-430	Query DEADLOCKED	The error queue, input buffer, and output buffer are full when sending large binary data as a response, and the transmission timing is off.

Operation completion event error

An error in the range [-899, -800] is used when the product wants to report an IEEE 488.2 operation complete event. This event occurs when the instrument's synchronization protocol, having been enabled by an *OPC command, completes all selected pending operations.

The occurrence of any error in this class causes the Operation Complete bit (bit 0) in the event status register to be set.

Error code		Error message description
-800	Operation complete	Operation complete

PMX-E series specific errors

An error in the range [1,32767] indicates that an error other than command error, query error, or execution error was detected. The occurrence of any error in this class causes the Device Dependent Error bit (bit 3) in the event status register to be set.

Error code		Error message description
+101	Conflicts with PROTection state	Configuration is not possible because a protection function is activated.
+102	Conflicts with OUPut ON state	Configuration is not possible because the output is on.
+141	CURR setting conflicts with CURR:PROT setting	Configuration is not possible because CURR is disabled by the CURR:PROT setting.
+142	CURR:PROT setting conflicts with CURR setting	Configuration is not possible because CURR:PROT is disabled by the CURR setting.
+151	VOLT setting conflicts with VOLT:PROT setting	Configuration is not possible because VOLT is disabled by the VOLT:PROT setting.
+152	VOLT:PROT setting conflicts with VOLT setting	Configuration is not possible because VOLT:PROT is disabled by the VOLT setting.
+157	Conflicts with OUP:EXT is active	Configuration is not possible because output on/off control using an external contact is enabled.
+301	Channel disabled	The channel setting is invalid.
+302	Conflicts with TRANsient in progress	Configuration is not possible because a TRANsient subsystem is running.
+303	Conflicts with OUTPut DELay in progress	Configuration is not possible because an output delay is in effect.
+305	Conflicts with Soft Start or Soft Stop in progress	Configuration is not possible because a soft start or soft stop is in effect.
+380	Invalid OUTPUT TIMER OFF Set Value	Output is not possible because the output-off timer function setting is invalid.
+390	Invalid MEMORY SEQUENCE Set Value	Output is not possible because the memory sequence function setting is invalid.
+801	MEMory contents coflict with VOLT:PROT setting	Memory content cannot be recalled because of the VOLT:PROT.
+802	MEMory contents coflict with CURR:PROT setting	Memory content cannot be recalled because of the CURR:PROT setting.
+901	EEPROM MODEL info lost	Model information was lost.
+902	EEPROM CAL info lost	Calibration information was lost.
+903	Wrong Model ID setup	An incorrect model ID is specified.

Disabling output on

The following commands relate to setting the conditions for the output-off timer function. When using it, set these to a non-nonE string or a non-0.00 value.
If you set them to nonE or 0.00, output-on will be disabled and the output-off timer function will be unavailable.
An SCPI error (+380, "Invalid OUTPUT TIMER OFF Set Value") occurs.

Command	CONFIG parameter	Description
OUTP:OFFT:TIM	CF81, CF82	Output-off timer function.
OUTP:OFFT:CVCC	CF87, CF88	Operation mode that triggers the output-off timer function.
OUTP:OFFT:CVCC:TIM	CF87, CF88	Output-off timer time after the start of the trigger operation mode.
CURR:OFFT:OVER	CF85	Upper limit current value at which the output turns off.
CURR:OFFT:UND	CF86	Lower limit current value at which the output turns off.
VOLT:OFFT:OVER	CF83	Upper limit voltage value at which the output turns off.
VOLT:OFFT:UND	CF84	Lower limit voltage value at which the output turns off.

The following commands relate to setting the preset memory function conditions. When using the memory sequence function, set these to a non-nonE string.
If you set them to nonE, output on will be disabled and the memory sequence function will be unavailable.
An SCPI error (+390, "Invalid MEMORY SEQUENCE Set Value") occurs.

Command	CONFIG parameter	Description
MEM:SEQ:TIME{A|B|C}	CF91 to CF93	If the settings are nonE, the memory sequence cannot function.

Command Processing Time

A certain amount of time is required before the commands shown in the following table are received by this product. The processing times indicated here are standard values. They are not guaranteed. The processing times vary depending on the settings and the measurement conditions. The values shown below do not include hardware response times.

Communication commands/conditions (if device settings affect speed)

LAN

Command	Processing time (ms)			Description
	VXI-11	HiSLIP	SCPI-RAW	
*IDN	5.98	3.38	3.22	Queries the model.
VOLT CURR	2.75	0.02	0.03	Setting the voltage and current
MEAS:VOLT? MEAS:CURR?	5.70	3.88	3.73	Querying measured values
OUTP {ON|OFF}	2.77	0.02	0.02	Output on/off
*RST	2.77	0.02	0.03	Reset

RS232C

Command	Processing time (ms)		Description
	19200 bps	115200 bps	
*IDN	32.00	16.00	Queries the model.
VOLT CURR	3.64	0.61	Setting the voltage and current
MEAS:VOLT? MEAS:CURR?	16.00	15.98	Querying measured values
OUTP {ON|OFF}	4.67	0.78	Output on/off
*RST	2.59	0.42	Reset

USB

Command	Processing time (ms)	Description
*IDN	0.63	Queries the model.
VOLT CURR	0.95	Setting the voltage and current
MEAS:VOLT? MEAS:CURR?	1.58	Querying measured values
OUTP {ON|OFF}	0.31	Output on/off
*RST	1.72	Reset

This page is intentionally blank.

Every effort has been made to ensure the accuracy of this manual. However, if you have any questions or find any errors or omissions, please contact your Kikusui agent or distributor.

After you have finished reading this manual, store it so that you can use it for reference at any time.

KIKUSUI ELECTRONICS CORP.

1-1-3 Higashiyamata, Tsuzuki-ku, Yokohama,
224-0023, Japan

Phone: +81-45-482-6353
Facsimile: +81-45-482-6261

global.kikusui.co.jp